FED. ROAD DIST. NO.	STATE	PROJ. NO.	FISCAL YEAR	SHEET NO.	TOTAL SHEETS
HAWAI'I	HAW.	11M-02-02M	2002	42	58

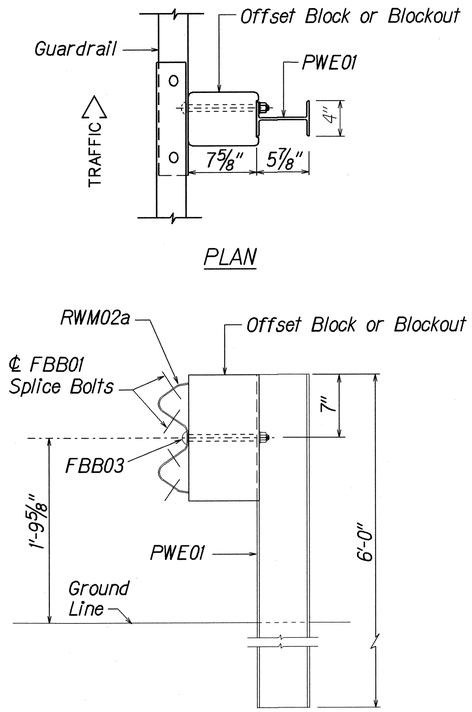

ELEVATION

STRONG POST W-BEAM GUARDRAIL (SGR04a)

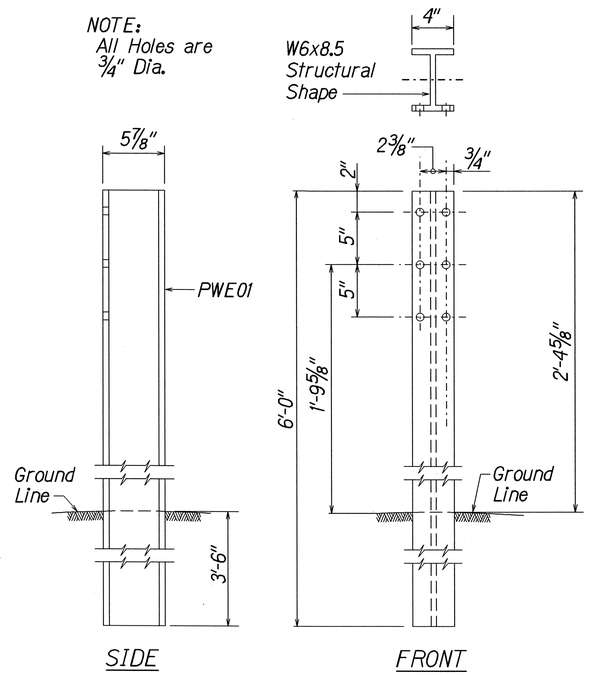

SIDE FRONT

W-BEAM STRONG POST (PWE01)

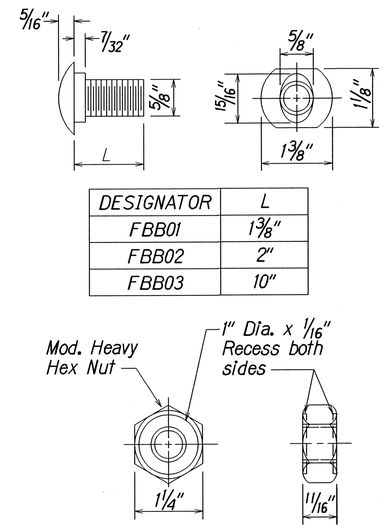

DESIGNATOR	L
FBB01	1⅜"
FBB02	2"
FBB03	10"

GUARDRAIL BOLTS AND RECESSED NUT

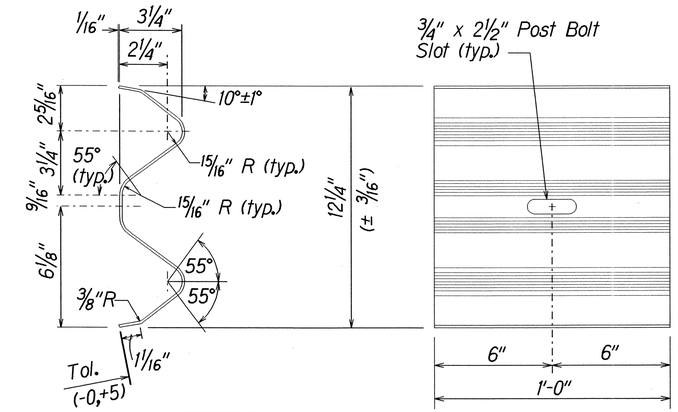

DESIGNATOR	BASE METAL THICKNESS
RWB01a	12 Gauge

W-BEAM BACK-UP-PLATE (RWB01a)

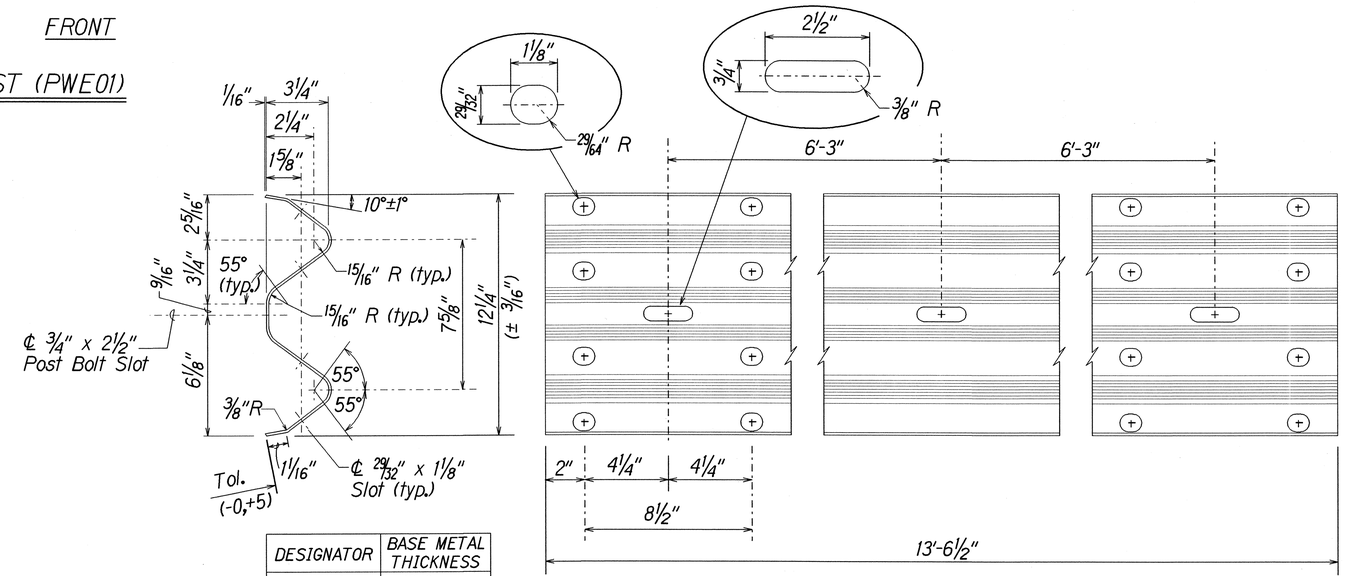

DESIGNATOR	BASE METAL THICKNESS
RWM02a	12 Gauge

2 SPACE W-BEAM GUARDRAIL (RWM02a)

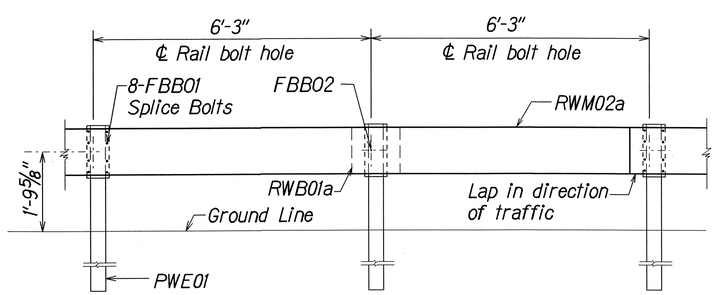

ELEVATION

STRONG POST W-BEAM GUARDRAIL WITH RECYCLED OFFSET BLOCK OR PLASTIC BLOCKOUT

STATE OF HAWAI'I
DEPARTMENT OF TRANSPORTATION
HIGHWAYS DIVISION

STRONG POST W-BEAM GUARDRAIL

VOLCANO ROAD RESURFACING
VICINITY OF MOUNTAIN VIEW SCHOOL
PROJECT NO. 11M-02-02M

Scale: NTS Date: April, 2002

SHEET No. 2 OF 18 SHEETS

ORIGINAL PLAN | SURVEY PLOTTED BY | DRAWN BY | TRACED BY | DESIGNED BY | QUANTITIES BY | CHECKED BY | DATE
NOTE BOOK | No. | PAGE

r6/13/01 tdl:ruby/guardrail/wbeamsp.dgn (standard plan TE-50 r03/06/87)

FED. ROAD DIST. NO.	STATE	PROJ. NO.	FISCAL YEAR	SHEET NO.	TOTAL SHEETS
HAWAI'I	HAW.	11M-02-02M	2002	43	58

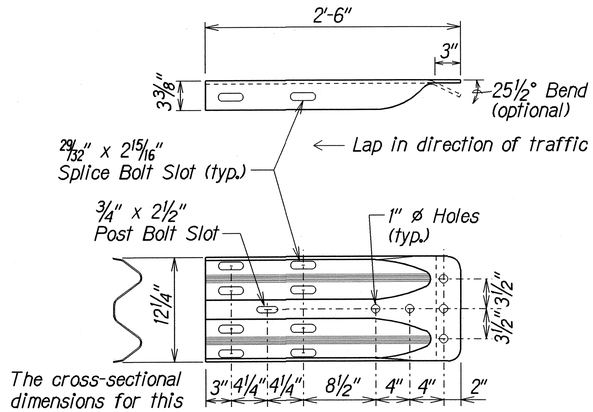

The cross-sectional dimensions for this part are to fit over part RWM02a on the approach end and under part RWM02a on the trailing end.

DESIGNATOR	BASE METAL THICKNESS
RWE02b	10 Gauge

W-BEAM TERMINAL CONNECTOR (RWE02b)

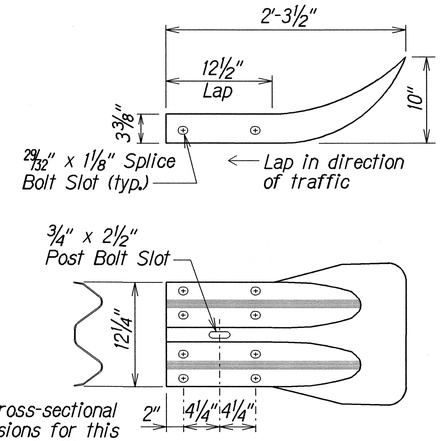

The cross-sectional dimensions for this part are to fit over part RWM02a on the approach end and under part RWM02a on the trailing end.

DESIGNATOR	BASE METAL THICKNESS
RWE01a	12 Gauge

W-BEAM END SECTION (FLARED RWE01a)

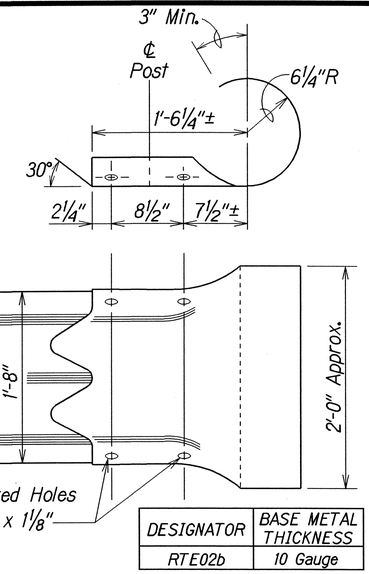

DESIGNATOR	BASE METAL THICKNESS
RTE02b	10 Gauge

THRIE-BEAM SECTION (ROUNDED) (RTE02b)

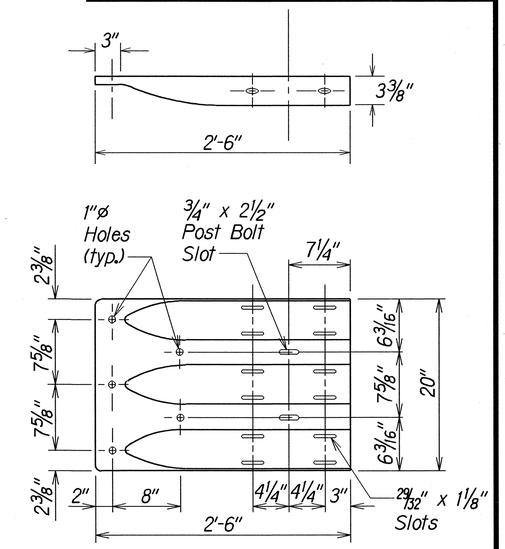

DESIGNATOR	BASE METAL THICKNESS
RTE01b	10 Gauge

THRIE-BEAM TERMINAL CONNECTOR (RTE01b)

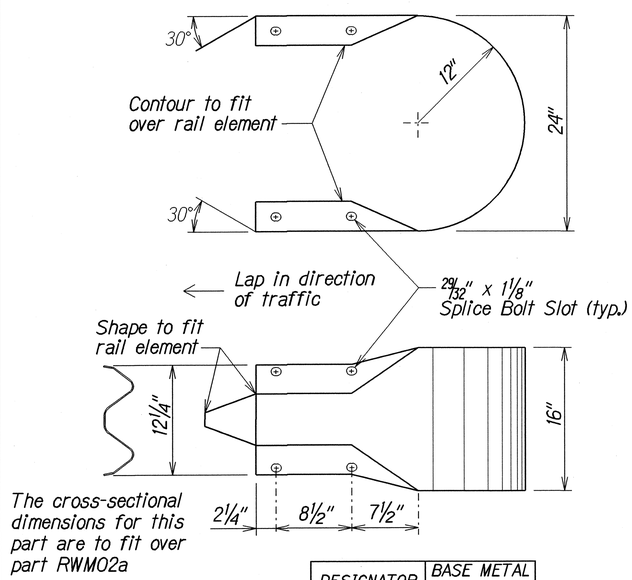

The cross-sectional dimensions for this part are to fit over part RWM02a

DESIGNATOR	BASE METAL THICKNESS
RWE06a	12 Gauge

W-BEAM END SECTION (BUFFER RWE06a)

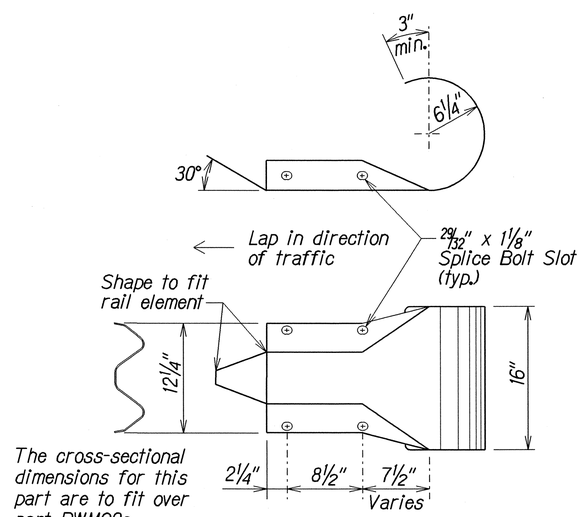

The cross-sectional dimensions for this part are to fit over part RWM02a

DESIGNATOR	BASE METAL THICKNESS
RWE03a	12 Gauge

W-BEAM END SECTION (ROUNDED RWE03a)

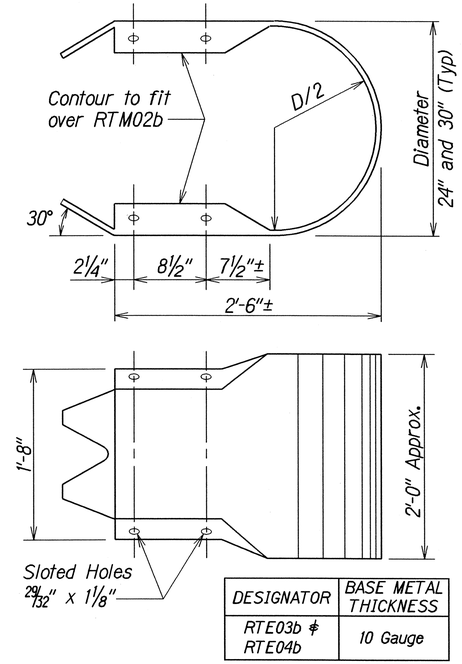

DESIGNATOR	BASE METAL THICKNESS
RTE03b & RTE04b	10 Gauge

THRIE-BEAM END SECTION (BUFFER RTE03b or RTE04b)

STATE OF HAWAI'I
DEPARTMENT OF TRANSPORTATION
HIGHWAYS DIVISION

GUARDRAIL TERMINAL CONNECTORS AND END SECTIONS

VOLCANO ROAD RESURFACING
VICINITY OF MOUNTAIN VIEW SCHOOL
PROJECT NO. 11M-02-02M

Scale: NTS — Date: April, 2002

SHEET No. 3 OF 18 SHEETS

ORIGINAL PLAN — SURVEY PLOTTED BY — DRAWN BY — TRACED BY — DESIGNED BY — QUANTITIES BY — CHECKED BY — DATE — NOTE BOOK No. — 30/1603 — 46/0

r6/21/01 hdl:rdy:guardrail/fe5rev.dgn (standard plan TE-51 r09/01/87)

FED. ROAD DIST. NO.	STATE	PROJ. NO.	FISCAL YEAR	SHEET NO.	TOTAL SHEETS
HAWAI'I	HAW.	11M-02-02M	2002	44	58

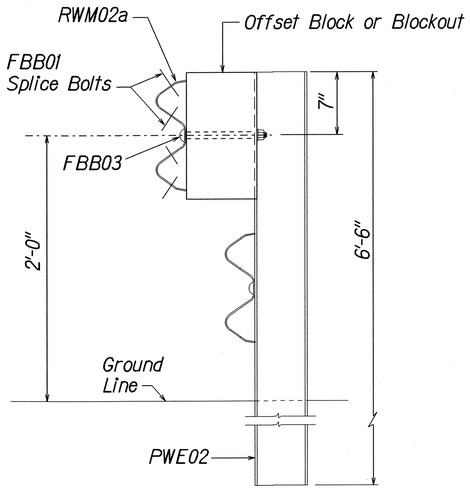

ELEVATION

STRONG POST RUBRAIL (W-BEAM) GUARDRAIL

NOTE:
All Holes are 3/4" Dia.

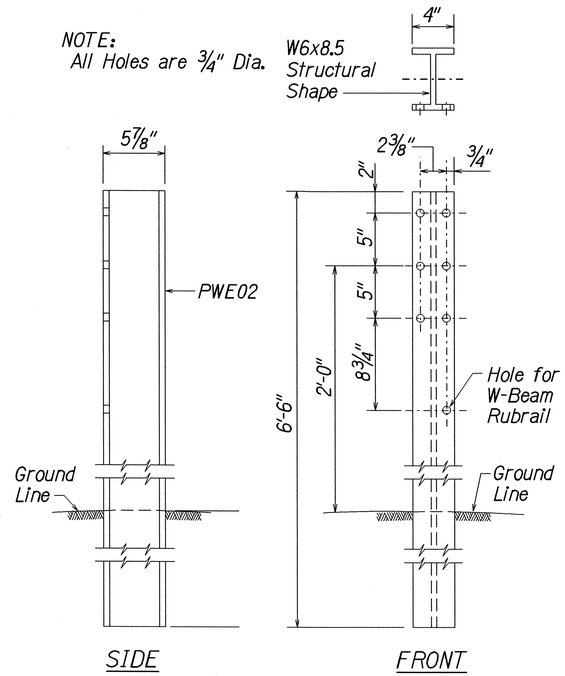

SIDE

FRONT

W-BEAM STRONG POST (PWE02)

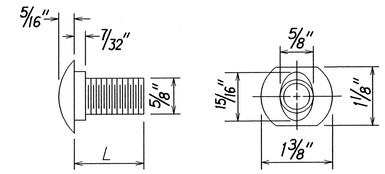

DESIGNATOR	L
FBB01	1 3/8"
FBB02	2"
FBB03	10"

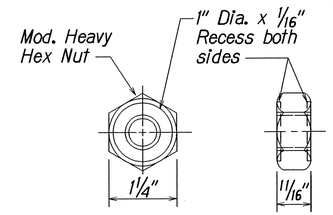

GUARDRAIL BOLTS AND RECESSED NUT

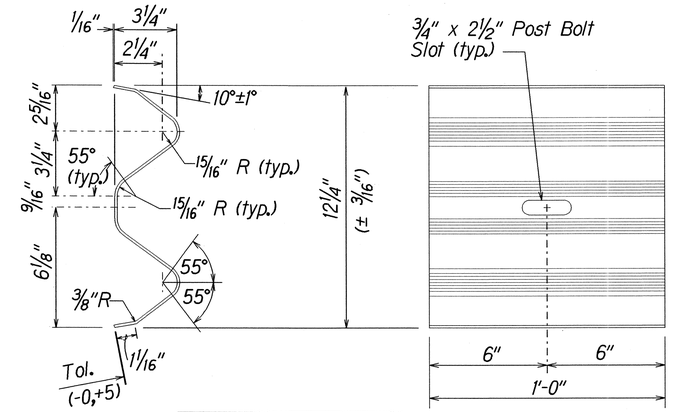

DESIGNATOR	BASE METAL THICKNESS
RWB01a	12 Gauge

W-BEAM BACK-UP-PLATE (RWB01a)

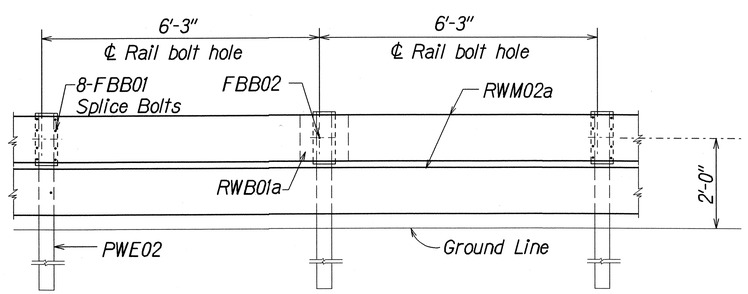

ELEVATION

STRONG POST RUBRAIL (W-BEAM) GUARDRAIL WITH RECYCLED OFFSET BLOCK OR PLASTIC BLOCKOUT

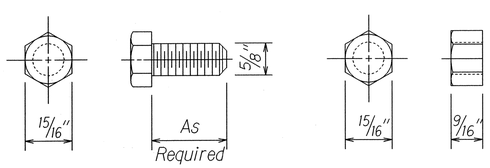

HEX BOLT & NUT (FBX16a)

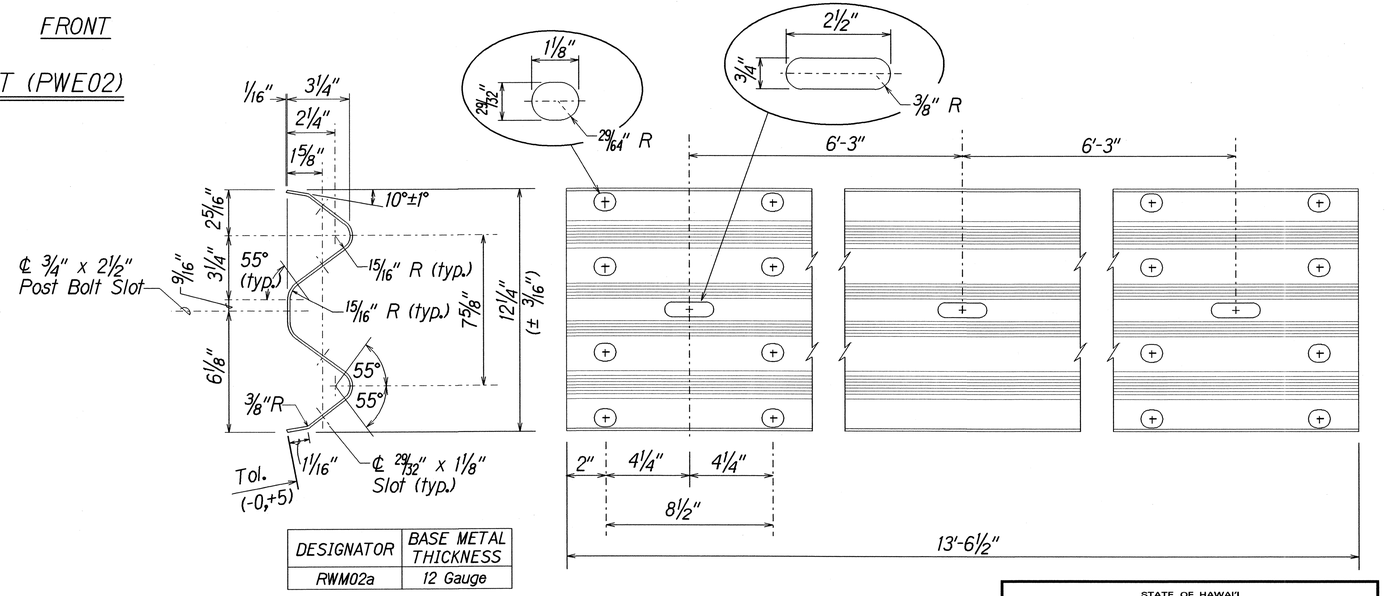

DESIGNATOR	BASE METAL THICKNESS
RWM02a	12 Gauge

2 SPACE W-BEAM GUARDRAIL (RWM02a)

STATE OF HAWAI'I
DEPARTMENT OF TRANSPORTATION
HIGHWAYS DIVISION

STRONG POST RUBRAIL (W-BEAM) GUARDRAIL

VOLCANO ROAD RESURFACING
VICINITY OF MOUNTAIN VIEW SCHOOL
PROJECT NO. 11M-02-02M

Scale: As Shown — Date: April, 2002

SHEET No. 4 OF 18 SHEETS

ORIGINAL PLAN — SURVEY PLOTTED BY — DRAWN BY — TRACED BY — DESIGNED BY — QUANTITIES BY — CHECKED BY — DATE — NOTE BOOK — No. — dgn

6/13/01 tdl:ruby/guardrail/rubrail.dgn (standard plan TE-52 11/03/89)

FED. ROAD DIST. NO.	STATE	PROJ. NO.	FISCAL YEAR	SHEET NO.	TOTAL SHEETS
HAWAI'I	HAW.	11M-02-02M	2002	45	58

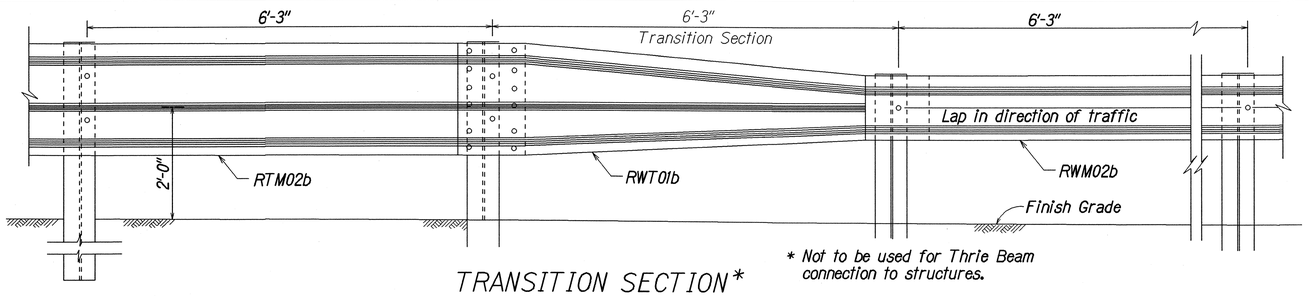

TRANSITION SECTION*

* Not to be used for Thrie Beam connection to structures.

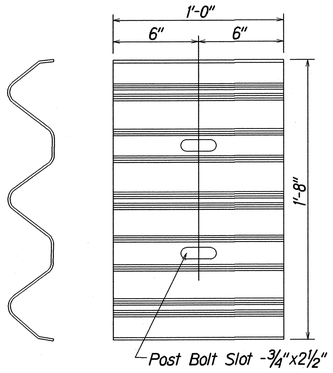

BACKUP PLATE

(RTB01b)

(Use at Posts where Splices do not occur)

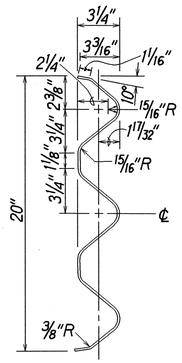

SECTION THRU RAIL ELEMENT

(RTM02b)

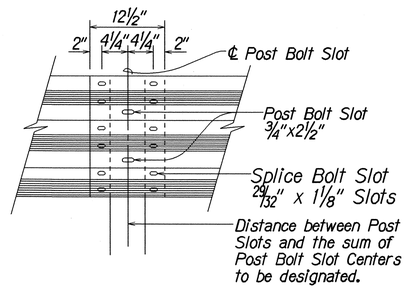

RAIL SPLICE

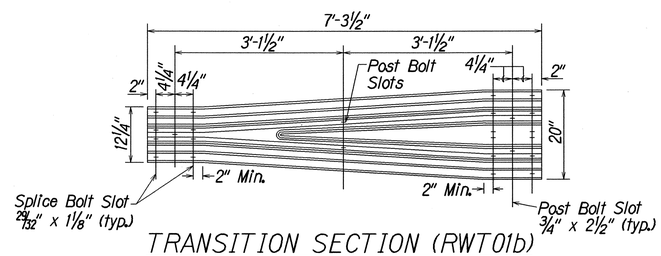

TRANSITION SECTION (RWT01b)

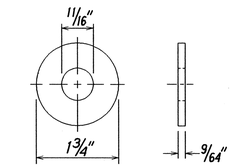

STEEL WASHER FOR 5/8" BOLT

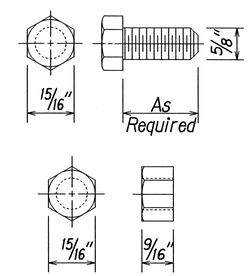

HEX BOLT & NUT

(FBX16a)

NOTE: All Holes are 3/4" Dia.

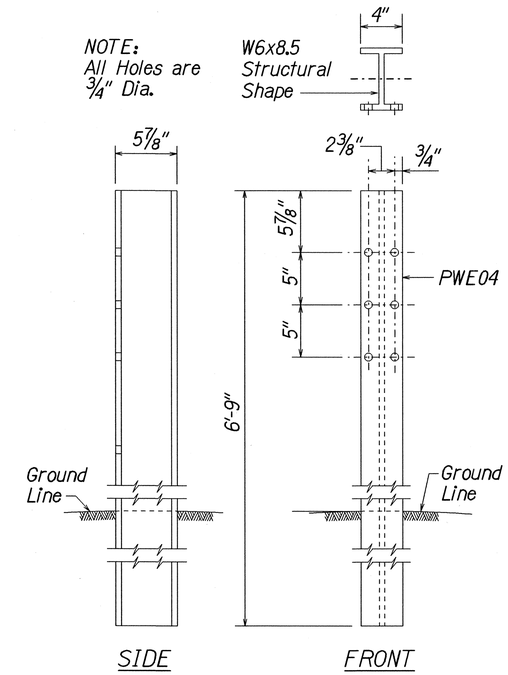

SIDE FRONT

W-BEAM STRONG POST (PWE04)

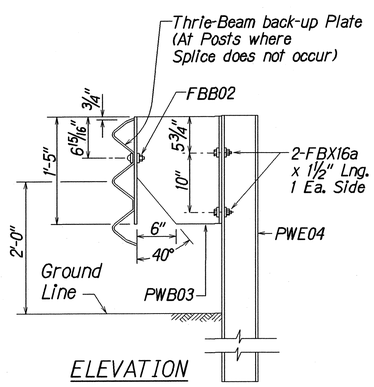

ELEVATION

STRONG POST MODIFIED THRIE-BEAM GUARDRAIL

(SGR09b)

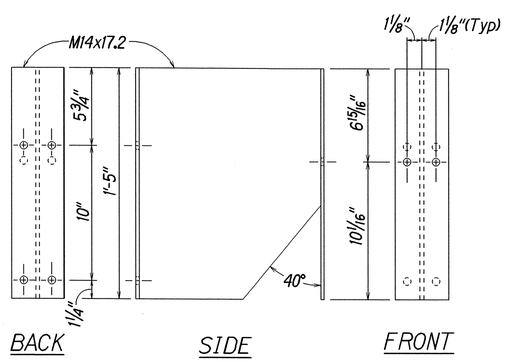

BACK SIDE FRONT

SPACER BLOCK PWB03

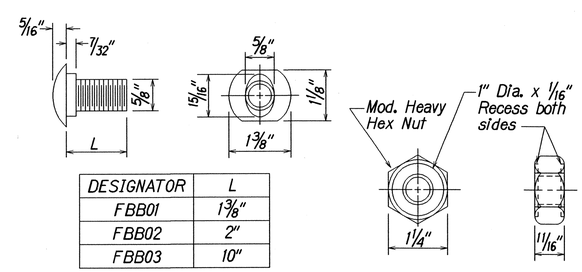

DESIGNATOR	L
FBB01	1 3/8"
FBB02	2"
FBB03	10"

GUARDRAIL BOLTS AND RECESSED NUT

STATE OF HAWAI'I
DEPARTMENT OF TRANSPORTATION
HIGHWAYS DIVISION

STRONG POST MODIFIED THRIE-BEAM GUARDRAIL

VOLCANO ROAD RESURFACING
VICINITY OF MOUNTAIN VIEW SCHOOL
PROJECT NO. 11M-02-02M

Scale: As Shown Date: April, 2002

SHEET No. 5 OF 18 SHEETS

ORIGINAL PLAN	SURVEY PLOTTED BY	DATE
	DRAWN BY	
	TRACED BY	
NOTE BOOK 30/105	DESIGNED BY	
	QUANTITIES BY	
No. 49	CHECKED BY	

tdl:ruby/guardrail/modthrie.dgn (standard plan TE-57 rll/03/89 & TE-57a rll/03/89)

6/13/01

FED. ROAD DIST. NO.	STATE	PROJ. NO.	FISCAL YEAR	SHEET NO.	TOTAL SHEETS
HAWAII	HAW.	11M-02-02M	2002	46	58

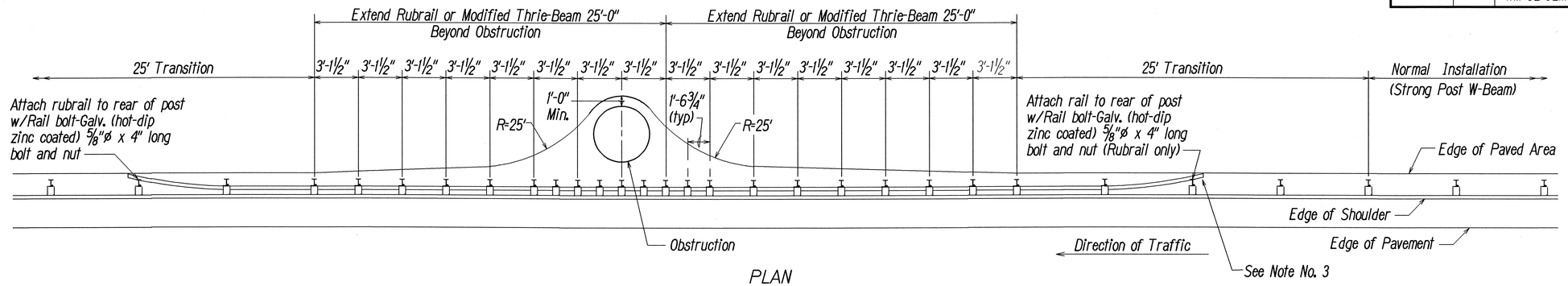

PLAN

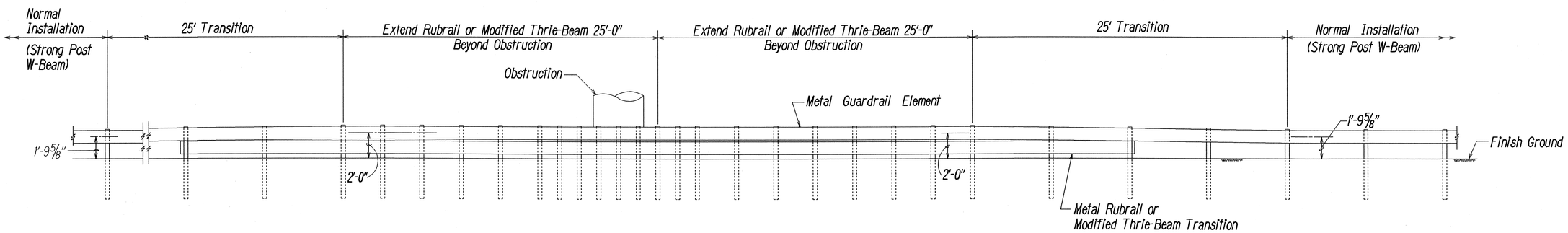

ELEVATION

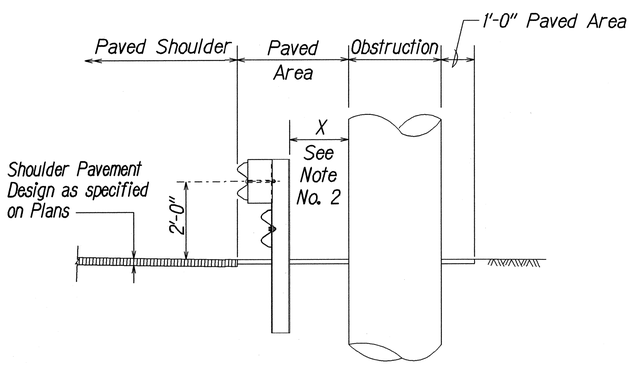

TYPICAL SECTION AT OBSTRUCTION

NOTES:

1. All Guardrail and Concrete Barrier Designs at Obstructions shall be approved by the Engineer.
2. If X < 2'-0", Concrete Barrier or special guardrail design;
   2'-0" ≤ X < 3'-0", Strong Post Rubrail or Strong Post Thrie-Beam with reduced post spacing;
   3'-0" ≤ X, Strong Post W-Beam with 6'-3" post spacing (Normal Installation).
3. If a pedestrian walkway or bicycle route is located behind the guardrail, the Engineer should install the Modified Thrie-Beam System. The Rubrail termini may become a hazard to pedestrians & bicyclists.

DETAIL OF GUARDRAIL INSTALLATION AT OBSTRUCTION

STATE OF HAWAII
DEPARTMENT OF TRANSPORTATION
HIGHWAYS DIVISION

GUARDRAIL DETAILS
(AT OBSTRUCTION)
VOLCANO ROAD RESURFACING
VICINITY OF MOUNTAIN VIEW SCHOOL
PROJECT NO. 11M-02-02M

Scale: NTS Date: April, 2002

SHEET No. 6 OF 18 SHEETS

ORIGINAL PLAN | SURVEY PLOTTED BY | DRAWN BY | TRACED BY | DESIGNED BY | QUANTITIES BY | CHECKED BY | DATE | NOTE BOOK No. | dgn

8/21/01 tdl-uby/guardrail/te54rev.dgn (standard plan TE-53 rev 01/87 & TE-54 rev 11/03/89)

FED. ROAD DIST. NO.	STATE	PROJ. NO.	FISCAL YEAR	SHEET NO.	TOTAL SHEETS
HAWAI'I	HAW.	11M-02-02M	2002	47	58

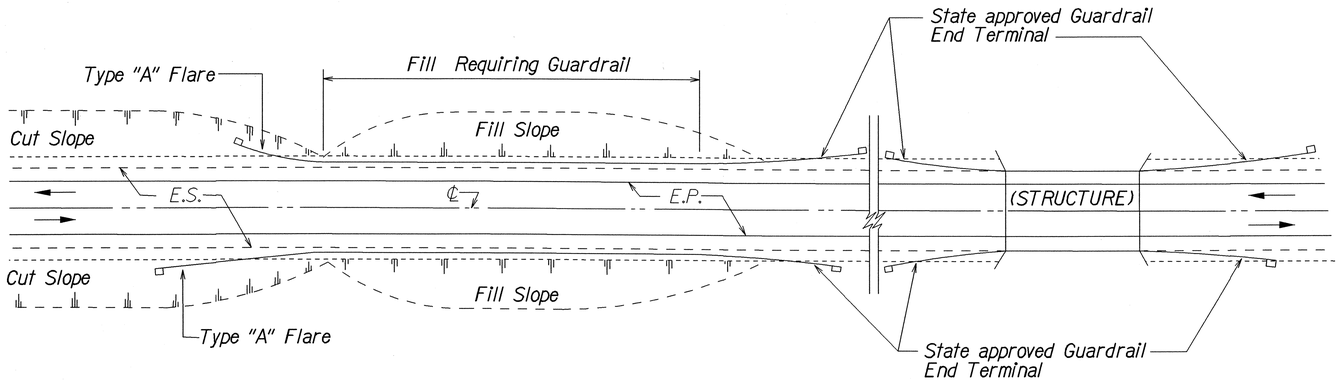

PLAN

TWO WAY ROADWAY

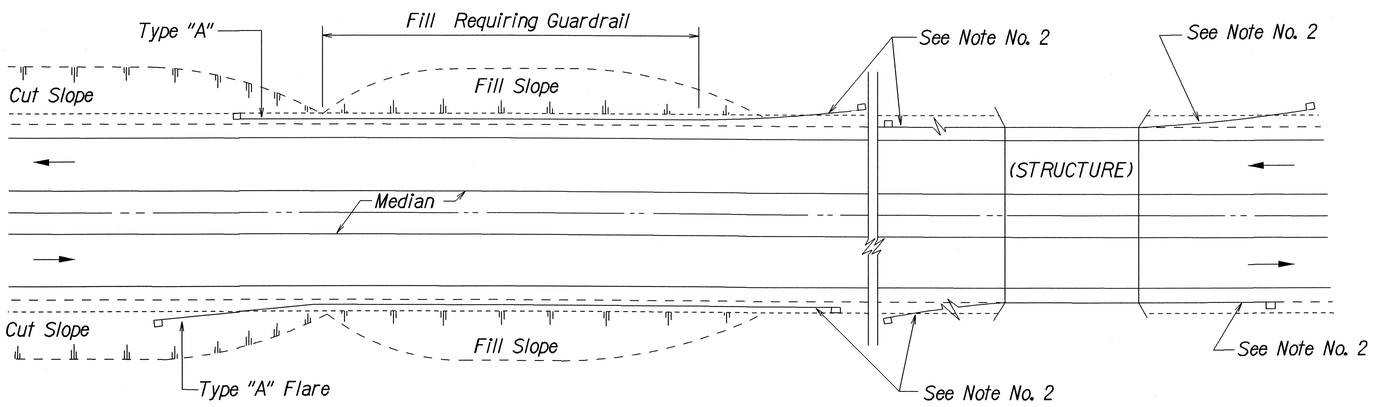

PLAN

ONE WAY ROADWAY (DIVIDED HIGHWAY)

NOTES:

1. Metal Guardrail connection to concrete structures requires End Post Connection. See Structure Plans.
2. Depending on the existing field conditions, the Engineer shall determine which guardrail end terminal should be installed.
3. Refer to State's most current approved Product List for NCHRP 350 approved Guardrail End Terminals.

ORIGINAL PLAN	SURVEY PLOTTED BY	DATE
	DRAWN BY	
	TRACED BY	
NOTE BOOK	DESIGNED BY	
No.	QUANTITIES BY	
	CHECKED BY	

r3/01/99 tdf:uby/guardrail/fe58rdw.dgn (standard plan TE-58 r07/01/86)

STATE OF HAWAI'I
DEPARTMENT OF TRANSPORTATION
HIGHWAYS DIVISION

GUARDRAIL DETAILS

VOLCANO ROAD RESURFACING
VICINITY OF MOUNTAIN VIEW SCHOOL
PROJECT NO. 11M-02-02M

Scale: NTS Date: April, 2002

SHEET No. 7 OF 18 SHEETS

FED. ROAD DIST. NO.	STATE	PROJ. NO.	FISCAL YEAR	SHEET NO.	TOTAL SHEETS
HAWAII	HAW.	11M-02-02M	2002	48	58

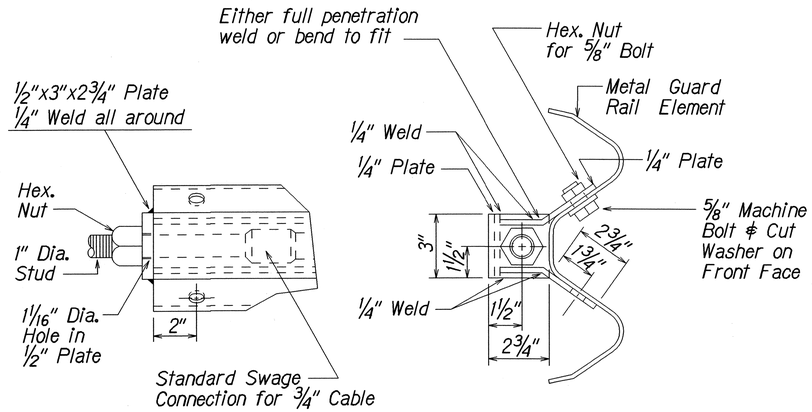

ANCHOR PLATE DETAILS

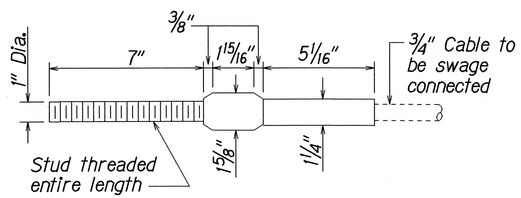

STANDARD SWAGED FITTING AND STUD

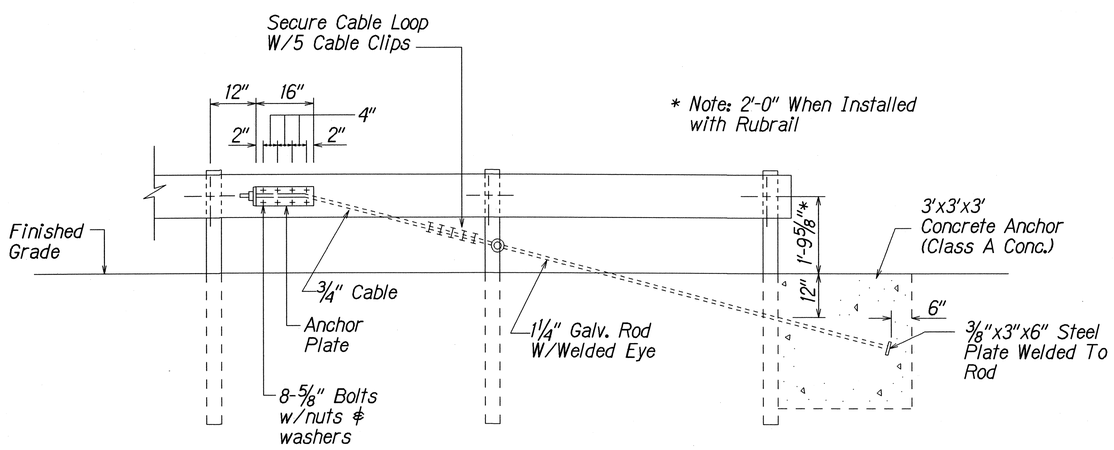

ANCHOR BLOCK DETAIL

1. Concrete, G.R.P., excavation, anchor rod and miscellaneous appurtenances necessary to anchor the guardrail ends shall be incidental to metal guardrail.

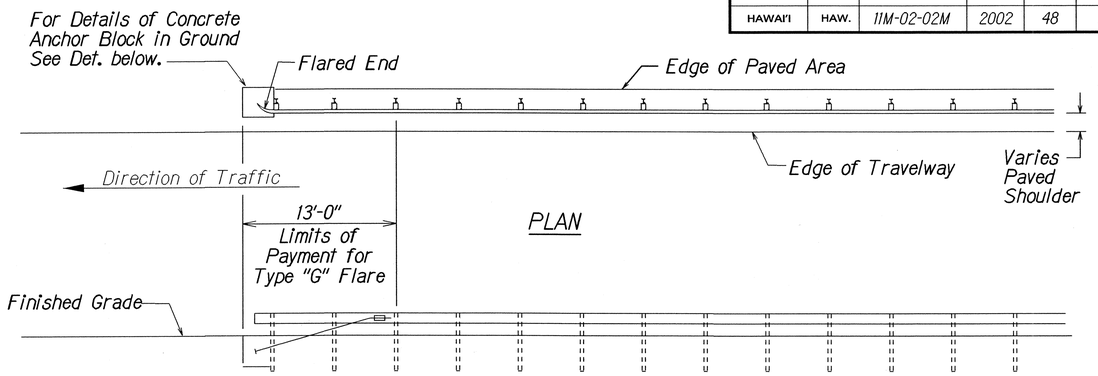

ELEVATION

TYPE "G" FLARE END TERMINAL

NOTE:

Type "G" Modified End Terminal is a site specific end terminal with a taper and radial termini. A site specific detailed drawing is required for all Type "G" Modified End Terminal and must receive Engineer's approval.

The taper (flare rate) of the guardrail shall follow the latest edition of AASHTO'S Roadside Design Guide (currently, Table 5.6 - Suggested Flare Rate for Barrier Design, page 5-21, Jan. 1996 edition).

The radius of the radial termini is an Engineer's judgement based on the site evaluation. The Engineer shall consider safety (minimize the spearing & blunt end situation); degree and potential seriousness of the hazard; bicycle and pedestrian accessibility; maintenance equipment accessibility; Right-of-Way availability; the smallest radii the metal w-beam/thrie-beam railing can be constructed (check with supplier/contractor); posted speed limit; angle of vehicle impact; and aesthetics when designing the Type "G" Modified End Terminal.

During construction, the Contractor shall layout the proposed Type "G" Modified End Terminal and receive approval from the Construction Engineer prior to installation.

ORIGINAL PLAN	SURVEY PLOTTED BY	DATE
	DRAWN BY	
	TRACED BY	
NOTE BOOK	DESIGNED BY	
	QUANTITIES BY	
No. dgn	CHECKED BY	

f:\ruby\guardrail\fe59evdgn (standard plan TE-59 rlr 03/89)

r3/13/02

STATE OF HAWAII
DEPARTMENT OF TRANSPORTATION
HIGHWAYS DIVISION

GUARDRAIL DETAILS

VOLCANO ROAD RESURFACING
VICINITY OF MOUNTAIN VIEW SCHOOL
PROJECT NO. 11M-02-02M

Scale: NTS Date: April, 2002

SHEET No. 8 OF 18 SHEETS

FED. ROAD DIST. NO.	STATE	PROJ. NO.	FISCAL YEAR	SHEET NO.	TOTAL SHEETS
HAWAII	HAW.	11M-02-02M	2002	49	58

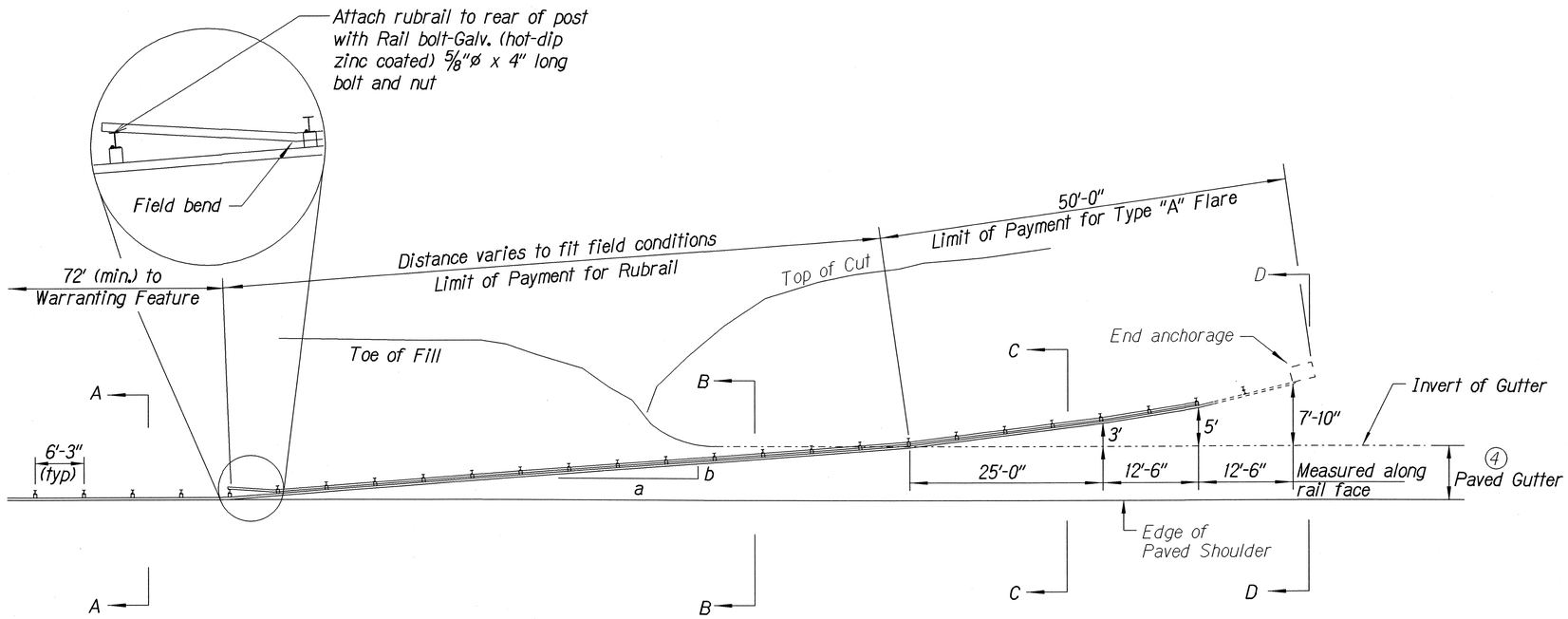

PLAN

Design speed mph	a:b
68	15:1
62	13:1
56	12:1
50	11:1
43	10:1
37	9:1
31	7:1

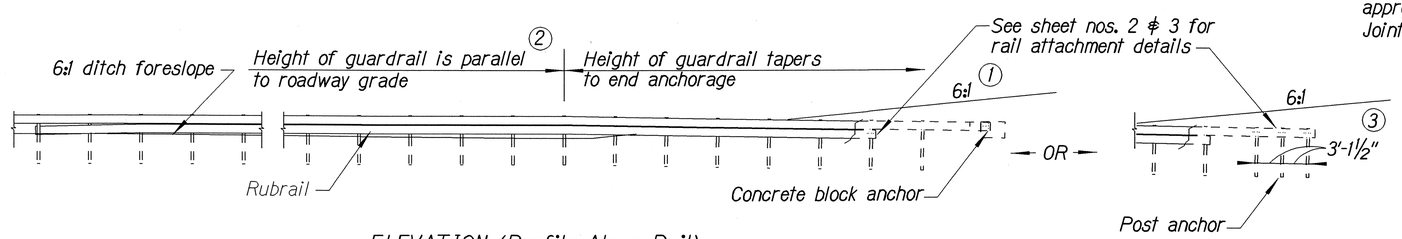

ELEVATION (Profile Along Rail)

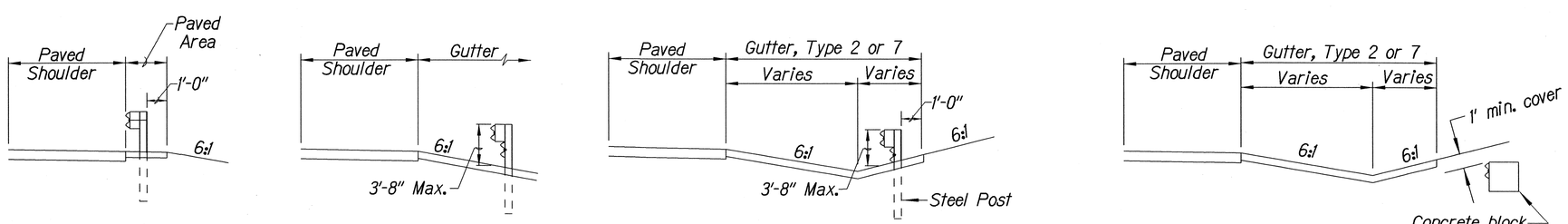

Section A-A

Section B-B
(With Rubrail)

Section C-C
(With Rubrail)

BACKSLOPE ANCHOR TERMINAL (WITH 6:1 PAVED GUTTER AND TYPE "A" FLARE)

General Notes

1. A 6:1 or flatter slope is desireable. However, a steeper or flatter existing slope may be used.
2. Height of guardrail may be tapered down in elevation to maintain 3'-8" maximum height.
3. All posts are 8'-0" in length from where the guardrail flares away from the shoulder back to the post anchor. Posts for the post anchor are 6'-0" long.
4. Variable Paved Gutter offsets may be used to fit field conditions.
5. The Guardrail Posts shall be located away from the gutter/swale invert.
6. All fasteners, posts, blocks and rail elements shall conform to the latest edition and amendments of "A Guide to Standardized Highway Barrier Rail Hardware," a report prepared and approved by the AASHTO-AGCARTBA Joint Cooperative Committee.

STATE OF HAWAII
DEPARTMENT OF TRANSPORTATION
HIGHWAYS DIVISION

TYPE "A" FLARE

VOLCANO ROAD RESURFACING
VICINITY OF MOUNTAIN VIEW SCHOOL
PROJECT NO. 11M-02-02M

Scale: NTS Date: April, 2002

SHEET No. 9 OF 18 SHEETS

ORIGINAL PLAN | SURVEY PLOTTED BY | DRAWN BY | TRACED BY | DESIGNED BY | QUANTITIES BY | CHECKED BY | DATE
NOTE BOOK No. 3/Table 3/Page

tdt:ruby/guardrail/g4gnreedlch.dgn (standard plan TE-58 07/01/86, TE-59 rll/03/89 & TE-60 07/01/86)

8/21/01

FED. ROAD DIST. NO.	STATE	PROJ. NO.	FISCAL YEAR	SHEET NO.	TOTAL SHEETS
HAWAI'I	HAW.	11M-02-02M	2002	50	58

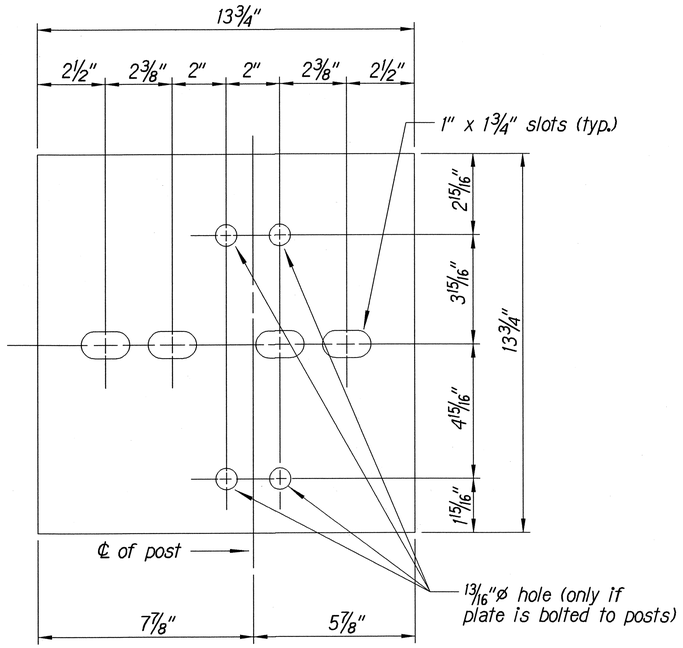

Steel Plate - 1/2"

(Hot-dip Zinc Coated Galvanized Welded or Bolted to Post)

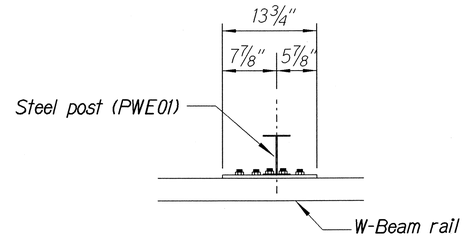

Plan

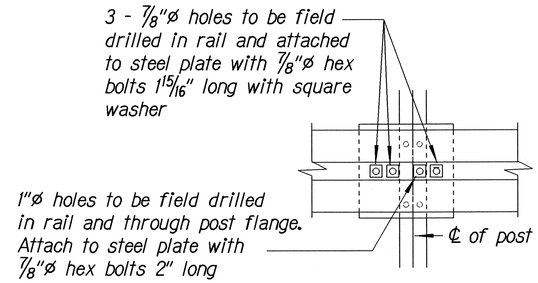

Front View

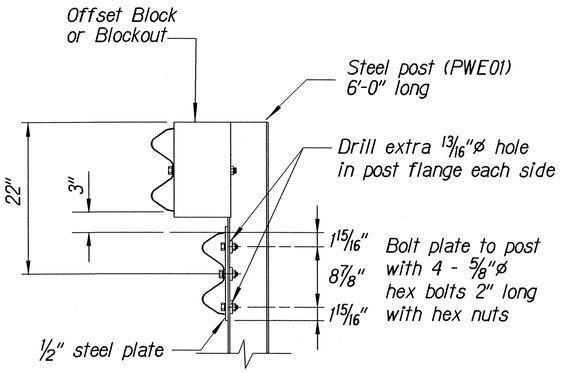

Elevation

RUBRAIL ANCHOR DETAILS

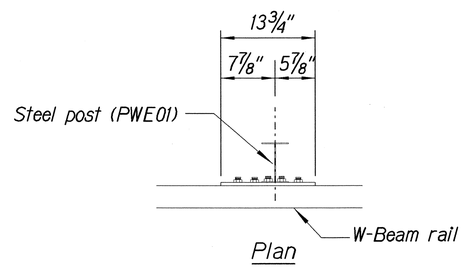

Plan

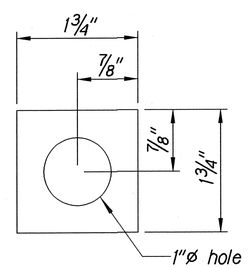

Square Washer

(3/16" Thick - Hot-dip Zinc Coated Galvanized)

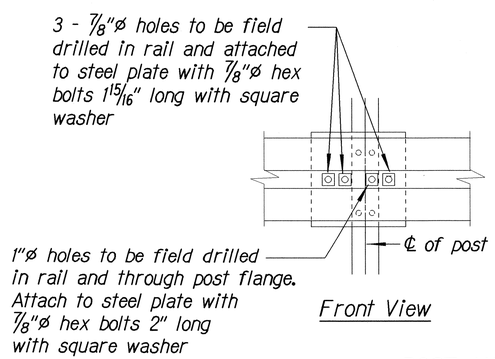

Front View

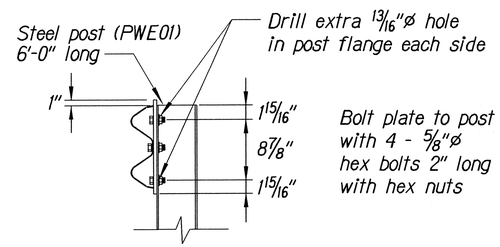

Elevation

POST ANCHOR DETAILS

BACKSLOPE ANCHOR TERMINAL END ANCHORAGE DETAILS

TYPE "A" FLARE)

Note:

All fasteners, posts, blocks and rail elements shall conform to the latest edition and amendments of "A Guide to Standardized Highway Barrier Rail Hardware," a report prepared and approved by the AASHTO-AGCARTBA Joint Cooperative Committee.

ORIGINAL PLAN	SURVEY PLOTTED BY	DATE
	DRAWN BY	
	TRACED BY	
NOTE BOOK	DESIGNED BY	
	QUANTITIES BY	
	CHECKED BY	

r3/01/99 td:ruby/guardrail/qkdef2.dgn (standard plan TE-58 07/01/86, TE-59 11/03/89 & TE-60 07/01/86)

STATE OF HAWAI'I
DEPARTMENT OF TRANSPORTATION
HIGHWAYS DIVISION

TYPE "A" FLARE

VOLCANO ROAD RESURFACING
VICINITY OF MOUNTAIN VIEW SCHOOL
PROJECT NO. 11M-02-02M

Scale: NTS Date: April, 2002

SHEET No. 10 OF 18 SHEETS

FED. ROAD DIST. NO.	STATE	PROJ. NO.	FISCAL YEAR	SHEET NO.	TOTAL SHEETS
HAWAII	HAW.	11M-02-02M	2002	51	58

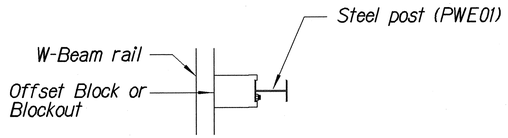

Plan

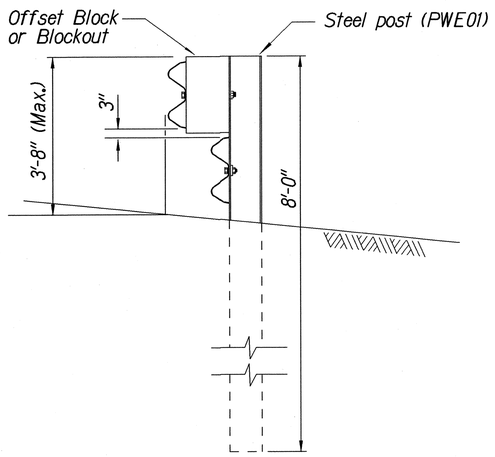

Elevation

STEEL POST GUARDRAIL WITH RUBRAIL

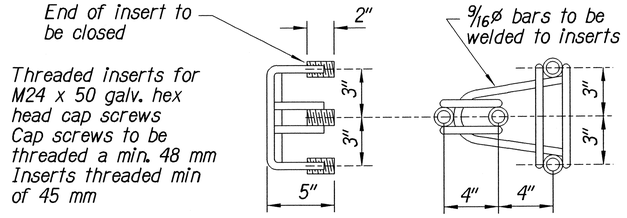

ANCHOR ASSEMBLY
CONCRETE BLOCK ANCHOR

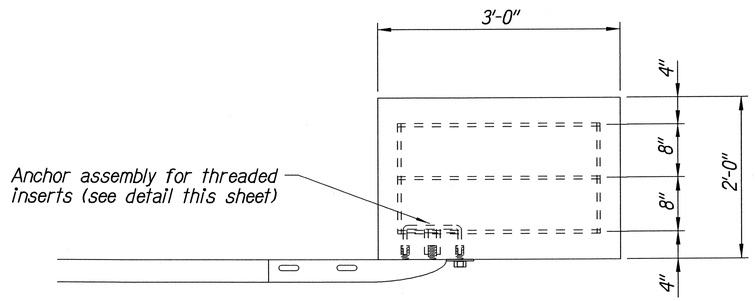

Plan

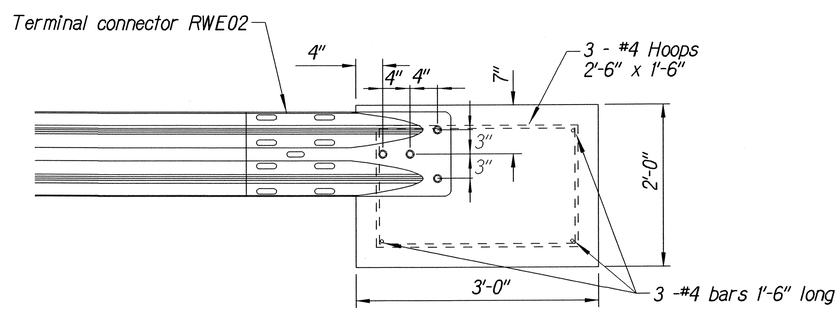

Elevation

CONCRETE BLOCK ANCHOR
(2' X 2' X 3')

BACKSLOPE ANCHOR TERMINAL END ANCHORAGE DETAILS
TYPE "A" FLARE)

Note:

All fasteners, posts, blocks and rail elements shall conform to the latest edition and amendments of "A Guide to Standardized Highway Barrier Rail Hardware," a report prepared and approved by the AASHTO-AGCARTBA Joint Cooperative Committee.

STATE OF HAWAII
DEPARTMENT OF TRANSPORTATION
HIGHWAYS DIVISION

TYPE "A" FLARE

VOLCANO ROAD RESURFACING
VICINITY OF MOUNTAIN VIEW SCHOOL
PROJECT NO. 11M-02-02M

Scale: NTS Date: April, 2002

SHEET No. 11 OF 18 SHEETS

ORIGINAL PLAN | SURVEY PLOTTED BY | DRAWN BY | TRACED BY | DESIGNED BY | QUANTITIES BY | CHECKED BY | DATE | NOTE BOOK No. | dgn

r3/01/99 rd:rdby/guardrail/ghdefl.dgn (standard plan TE-58 07/01/86, TE-59 rll/03/89 & TE-60 07/01/86)

FED. ROAD DIST. NO.	STATE	PROJ. NO.	FISCAL YEAR	SHEET NO.	TOTAL SHEETS
HAWAI'I	HAW.	11M-02-02M	2002	52	58

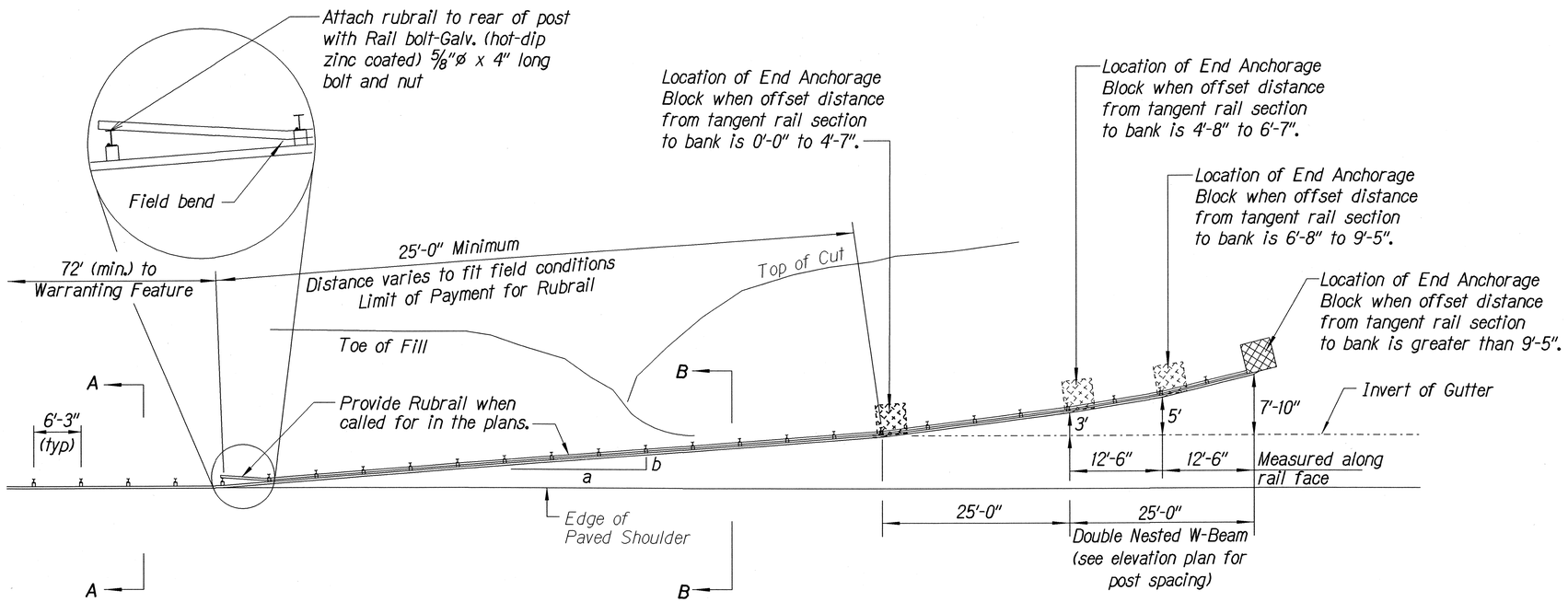

PLAN

Design speed mph	a:b
68	15:1
62	13:1
56	12:1
50	11:1
43	10:1
37	9:1
31	7:1

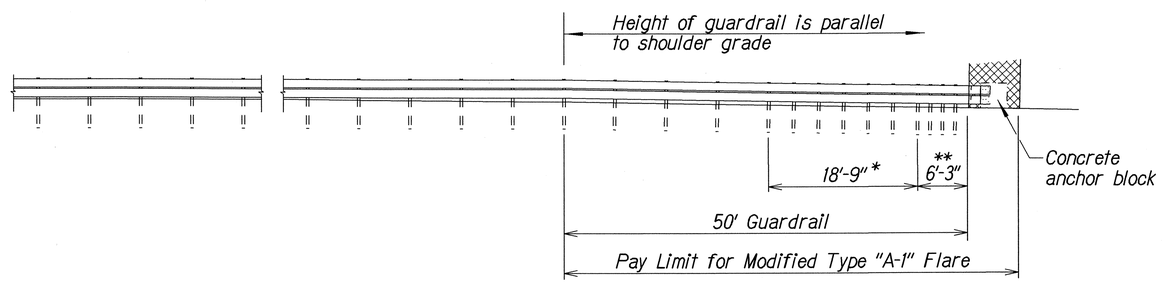

* Posts at 3'-1½" o.c.
** Posts at 1'-6¾" o.c.

ELEVATION (Profile Along Rail)

General Notes

1. All posts are 6'-0" in length within the 50'-0" pay limit for the Modified Type "A-1" Flare without rubrail.
2. Whenever swales or a change in grade is encountered within the 50'-0" pay limit for the Modified Type "A-1" Flare, a rubrail shall be installed and all posts shall have a minimum embedment of 4'-0". Post lengths shall be adjusted to provide the minimum embedment.
3. All fasteners, posts, blocks and rail elements shall conform to the latest edition and amendments of "A Guide to Standardized Highway Barrier Rail Hardware", a report prepared and approved by the AASHTO-AGCARTBA Joint Cooperative Committee and HDOT's Statewide Guideline for Permanent Highway Safety Hardware.
4. Limit of payment for Modified Type "A-1" Flare shall be 50'-0" from End Shoe including Rubrail (when applicable), Anchor Block and GRP work.
5. Excavation, Anchor Block, Backfill and GRP work shall be considered incidental to the Modified Type "A-1" Flare.

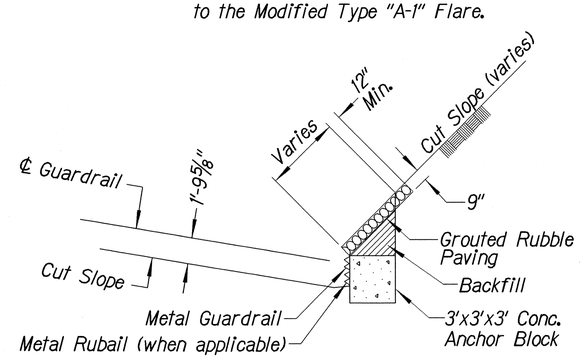

ANCHOR BLOCK IN CUT SECTION

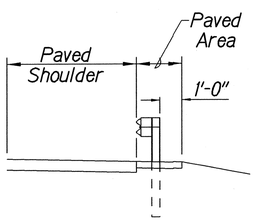

Section A-A

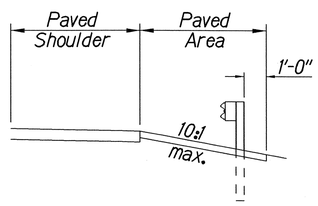

Section B-B

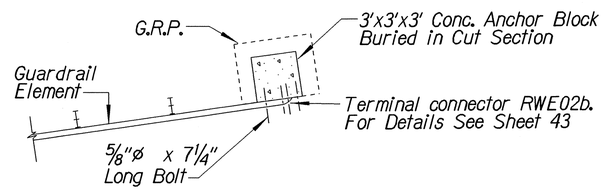

PLAN - ANCHOR BLOCK IN CUT SECTION

STATE OF HAWAI'I
DEPARTMENT OF TRANSPORTATION
HIGHWAYS DIVISION

MODIFIED TYPE "A-1" FLARE

VOLCANO ROAD RESURFACING
VICINITY OF MOUNTAIN VIEW SCHOOL
PROJECT NO. 11M-02-02M

Scale: As Noted — Date: April, 2002

SHEET No. 12 OF 18 SHEETS

ORIGINAL PLAN — SURVEY PLOTTED BY — DRAWN BY — TRACED BY — DESIGNED BY — QUANTITIES BY — CHECKED BY — DATE
NOTE BOOK No. 30/ab/0a
dgn

rb/21/01 rd:ruby/guardrail/flare_a1.dgn (standard plan TE-58 07/01/86, TE-59 rd/03/89 & TE-60 07/01/86)

FED. ROAD DIST. NO.	STATE	PROJ. NO.	FISCAL YEAR	SHEET NO.	TOTAL SHEETS
HAWAII	HAW.	11M-02-02M	2002	53	58

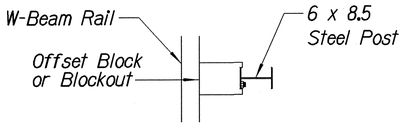

Plan

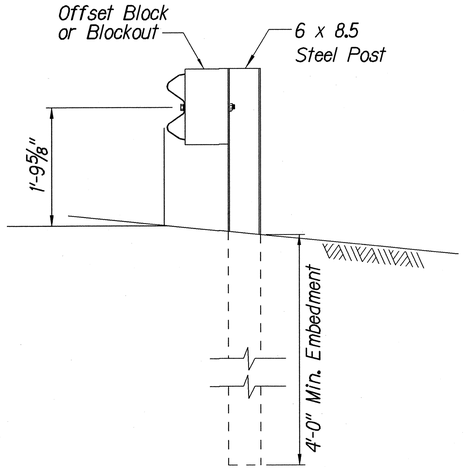

Elevation

STRONG POST W-BEAM GUARDRAIL

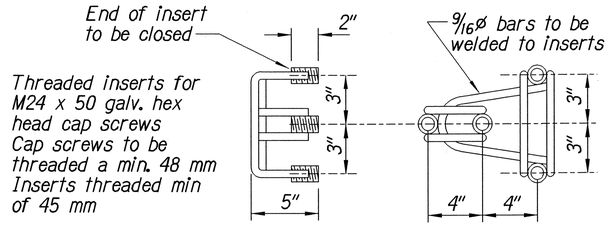

ANCHOR ASSEMBLY
CONCRETE BLOCK ANCHOR

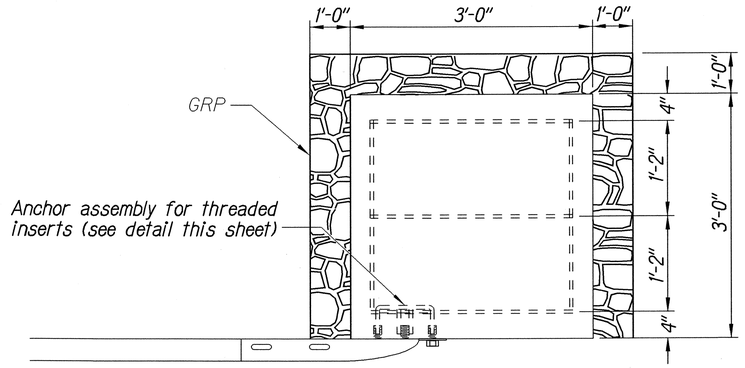

Plan

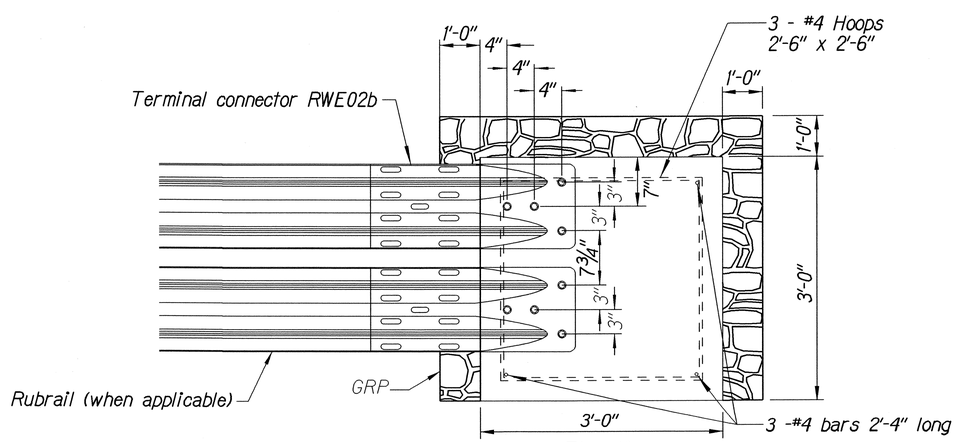

Elevation

CONCRETE BLOCK ANCHOR
(3' X 3' X 3')

BACKSLOPE ANCHOR TERMINAL END ANCHORAGE DETAILS
MODIFIED TYPE "A-1" FLARE

Note:

All fasteners, posts, blocks and rail elements shall conform to the latest edition and amendments of "A Guide to Standardized Highway Barrier Rail Hardware," a report prepared and approved by the AASHTO-AGCARTBA Joint Cooperative Committee and HDOT's Statewide Guideline for Permanent Highway Safety Hardware.

ORIGINAL PLAN	SURVEY PLOTTED BY	DATE
	DRAWN BY	
	TRACED BY	
NOTE BOOK	DESIGNED BY	
	QUANTITIES BY	
N.	CHECKED BY	

r5/2/01 tdrubyguardrail/flare_al_2.dgn (standard plan TE-58 07/01/86, TE-59 11/03/89 & TE-60 07/01/86)

STATE OF HAWAII
DEPARTMENT OF TRANSPORTATION
HIGHWAYS DIVISION

MODIFIED TYPE "A-1" FLARE

VOLCANO ROAD RESURFACING
VICINITY OF MOUNTAIN VIEW SCHOOL
PROJECT NO. 11M-02-02M

Scale: Not To Scale Date: April, 2002

SHEET No. 13 OF 18 SHEETS

FED. ROAD DIST. NO.	STATE	PROJ. NO.	FISCAL YEAR	SHEET NO.	TOTAL SHEETS
HAWAII	HAW.	11M-02-02M	2002	54	58

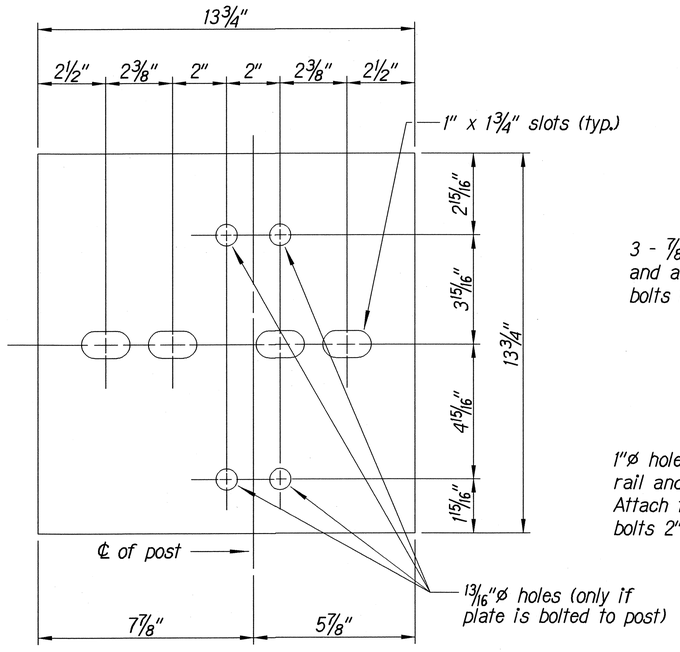

Steel Plate - 1/2"

(Hot-dip Zinc Coated Galvanized-Welded or Bolted to Post)

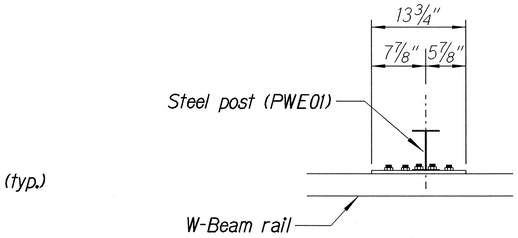

Plan

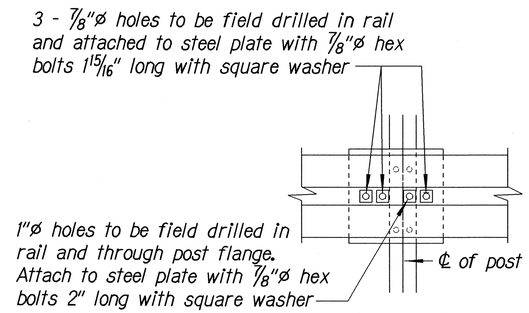

Front View

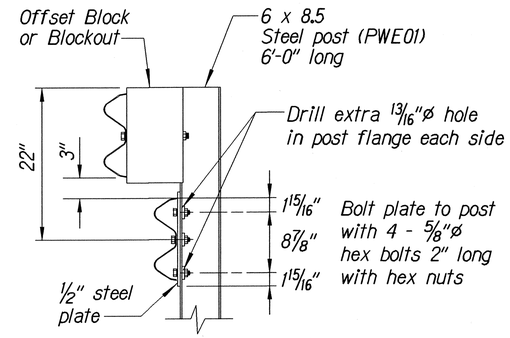

Elevation

RUBRAIL ANCHOR DETAILS

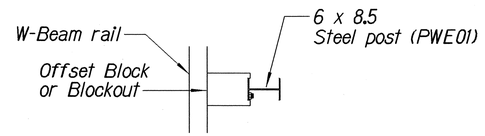

Plan

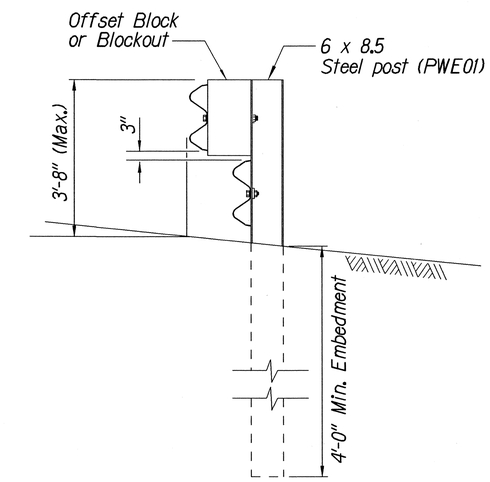

Elevation

STEEL POST GUARDRAIL WITH RUBRAIL

Note:

All fasteners, posts, blocks and rail elements shall conform to the latest edition and amendments of "A Guide to Standardized Highway Barrier Rail Hardware", a report prepared and approved by the AASHTO-AGCARTBA Joint Cooperative Committee.

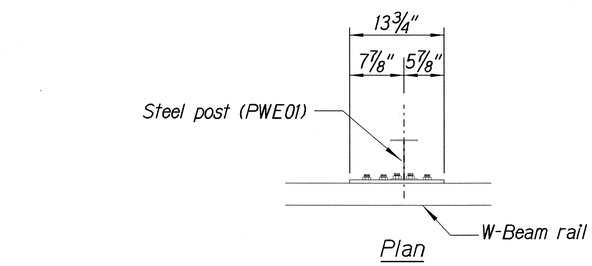

Plan

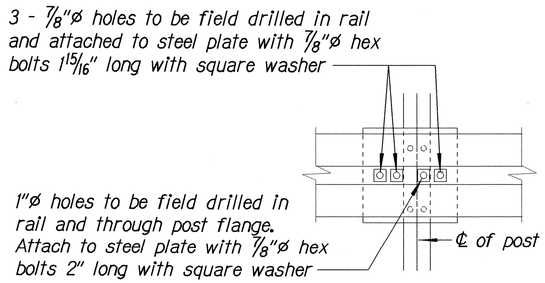

Front View

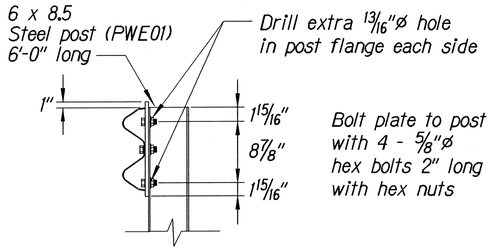

Elevation

POST ANCHOR DETAILS

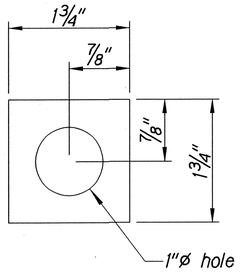

Square Washer

(3/16" Thick - Hot-dip Zinc Coated Galvanized)

RUBRAIL DETAIL FOR MODIFIED TYPE "A-1" FLARE (WHEN CALLED FOR IN PLANS)

STATE OF HAWAII
DEPARTMENT OF TRANSPORTATION
HIGHWAYS DIVISION

MODIFIED TYPE "A-1" FLARE RUBRAIL DETAILS

VOLCANO ROAD RESURFACING
VICINITY OF MOUNTAIN VIEW SCHOOL
PROJECT NO. 11M-02-02M

Scale: As Noted — Date: April, 2002

SHEET No. 14 OF 18 SHEETS

ORIGINAL PLAN	SURVEY PLOTTED BY	DATE
	DRAWN BY	
	TRACED BY	
NOTE BOOK	DESIGNED BY	
	QUANTITIES BY	
No.	CHECKED BY	

f:\2/01 hdr\rbr\guardrail\flare_a1.3.dgn

FED. ROAD DIST. NO.	STATE	PROJ. NO.	FISCAL YEAR	SHEET NO.	TOTAL SHEETS
HAWAII	HAW.	11M-02-02M	2002	55	58

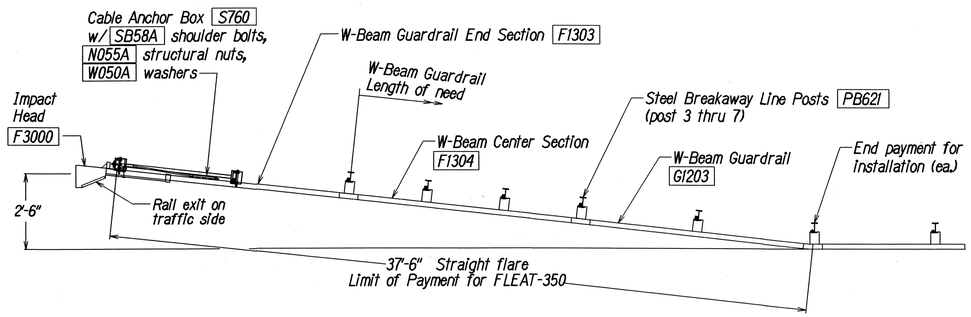

PLAN

TRAFFIC

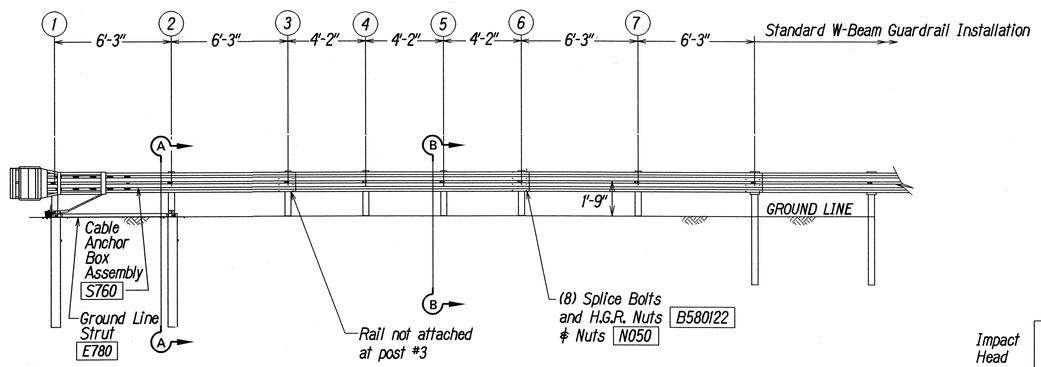

ELEVATION

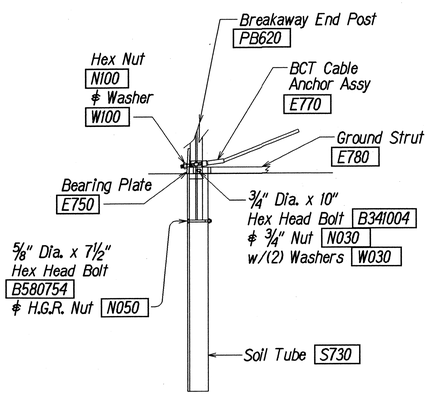

PARTIAL VIEW OF POST 1

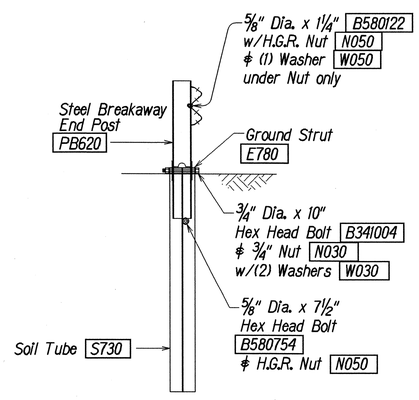

SECTION A-A
(@ Post #2)

GENERAL NOTES

1. Breakaway steel posts are required with the FLEAT Terminal.
2. All bolts, nuts, cable assemblies, cable anchors and bearing plates shall be galvanized.
3. The soil tubes shall not protrude more than 4" above ground (measured along a 5' cord). Site grading may be necessary to meet this requirement.
4. The soil tubes may be driven with an approved driving head. Soil tubes shall not be driven with the post in the tube. If the tubes are placed in drilled holes, the backfill material must be satisfactorily compacted to prevent settlement.
5. When rock is encountered during excavation, a 12" Dia. post hole, 20" deep may be used if approved by the engineer. Granular material will be placed in the bottom of the hole approx. 2 1/2" deep to provide drainage. The soil tubes will be field cut to length, placed in the hole and backfilled with adequately compacted material excavated from the hole.
6. The breakaway cable assembly must be taut. A locking device, (vice grips or channel lock pliers) should be used to prevent the cable from twisting when tightening nuts.
7. (R) or (L) indicates right or left Impact Head Reflector Marker (IHRM). Providing and installing of IHRM shall be considered incidental to end treatment.
8. The stripes for IHRM shall slope downward at an angle of 45° towards the side of the end treatment that traffic is to pass.

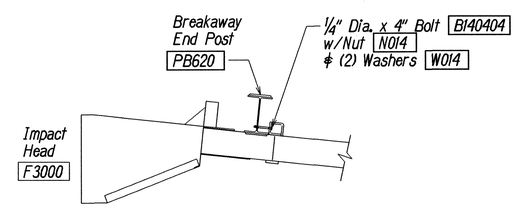

IMPACT HEAD CONNECTING DETAIL

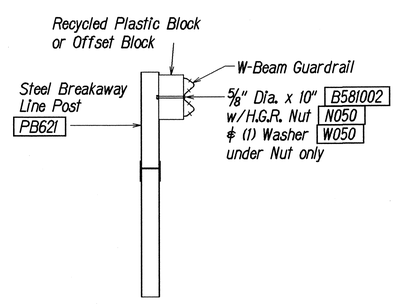

SECTION B-B
(Typical @ Post 3 - 7)
NOTE: RAIL NOT BOLTED @ POST #3

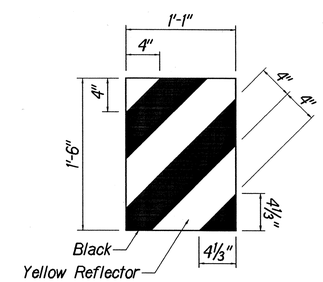

IHRM(R)
IMPACT HEAD REFLECTOR MARKER INSERT DETAIL

ITEM NO.	QTY.	BILL OF MATERIALS
F3000	1	IMPACT HEAD
F1303	1	W-BEAM GUARDRAIL END SECTION, 12 GA.
F1304	1	W-BEAM GUARDRAIL CENTER SECTION, 12 GA.
G1203	1	W-BEAM GUARDRAIL, 12 GA.
S730	2	*FOUNDATION SOIL TUBE, 6" x 8" x 72"
E750	1	BEARING PLATE
S760	1	CABLE ANCHOR BOX
E770	1	BCT CABLE ANCHOR ASSEMBLY
E780	1	GROUND STRUT
PB620	2	STEEL BREAKAWAY END POST
PB621	5	STEEL BREAKAWAY LINE POST
	5	RECYCLED PLASTIC BLOCKOUT OR OFFSET BLOCK
	1	IMPACT HEAD REFLECTOR MARKER - IHRM(R) OR (L)
		HARDWARE
B580122	25	5/8" Dia. x 1 1/4" SPLICE BOLT, POST #2
B580754	2	5/8" Dia. x 7 1/2" HEX BOLT
B341004	2	3/4" Dia. x 10" HEX BOLT
B581002	5	5/8" Dia. x 10" H.G.R. BOLT (POST 3 THRU 7)
N050	32	5/8" Dia. H.G.R. NUT (SPLICE 24, SOIL TUBES 2, POST 2 THRU 7, G)
N030	2	3/4" Dia. HEX NUT
W050	6	H.G.R. WASHER
W030	4	3/4" ID WASHER
N100	2	1" ANCHOR CABLE HEX NUT
W100	2	1" ANCHOR CABLE WASHER
B140404	2	1/4" x 4" HEX BOLT
N014	2	1/4" HEX NUT
W014	4	1/4" WASHER
SB58A	8	CABLE ANCHOR BOX SHOULDER BOLT
N055A	8	1/2" A325 STRUCTURAL NUT
W050A	16	1 1/16" OD x 9/16" ID A325 STR. WASHER

Foundation Tube Options For Posts 1 & 2
*6'-0" Split Foundation Tubes S730
*6'-0" Solid Foundation Tubes E731
*5'-0" Foundation Tubes S735 W/Soil Plates SP600
*4'-6" Foundation Tubes E735 W/Soil Plates SP600

STATE OF HAWAII
DEPARTMENT OF TRANSPORTATION
HIGHWAYS DIVISION

FLEAT-350
FLARED ENERGY ABSORBING TERMINAL

VOLCANO ROAD RESURFACING
VICINITY OF MOUNTAIN VIEW SCHOOL
PROJECT NO. 11M-02-02M

Scale: As Shown — Date: April, 2002

SHEET No. 15 OF 18 SHEETS

ORIGINAL PLAN — SURVEY PLOTTED BY — DRAWN BY X — TRACED BY — DESIGNED BY X — QUANTITIES BY — CHECKED BY — DATE X — NOTE BOOK — No.

r3/28/01 fdl:ruby/guardrail/fleat350.dgn (standard plan TE-6) r11/03/89 & TE-62 r09/01/87

FED. ROAD DIST. NO.	STATE	FED. AID PROJ. NO.	FISCAL YEAR	SHEET NO.	TOTAL SHEETS
HAWAI'I	HAW.	11M-02-02M	2002	56	58

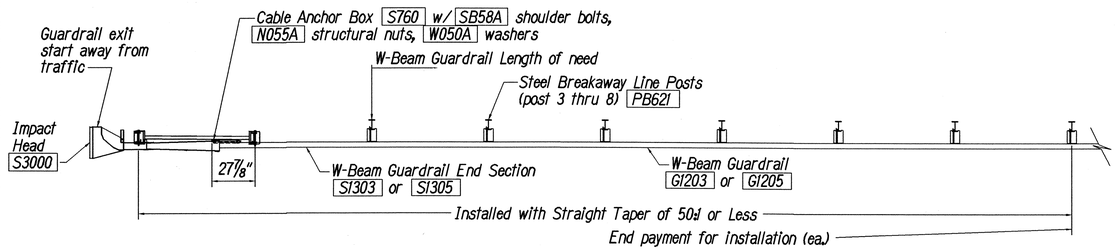

PLAN

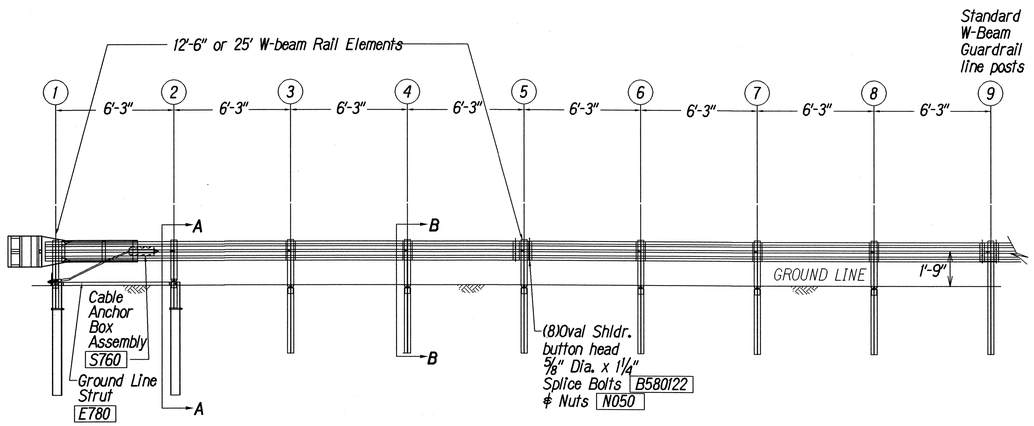

ELEVATION

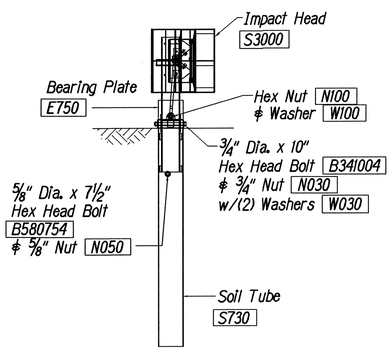

FRONT VIEW OF POST 1

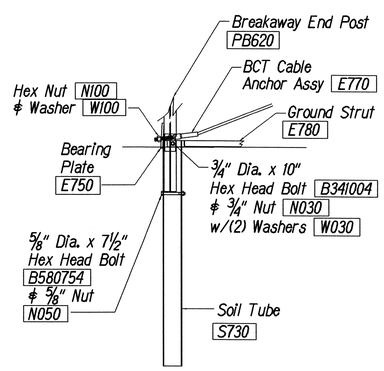

PARTIAL VIEW OF POST 1

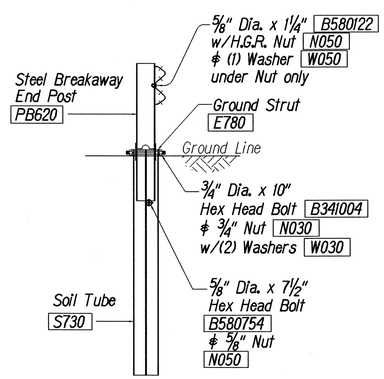

SECTION A-A
at Post #2

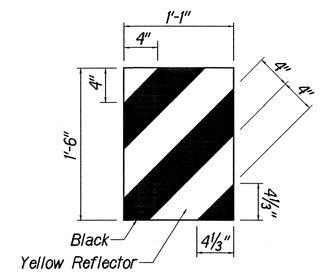

IHRM(R)
IMPACT HEAD REFLECTOR MARKER INSERT DETAIL

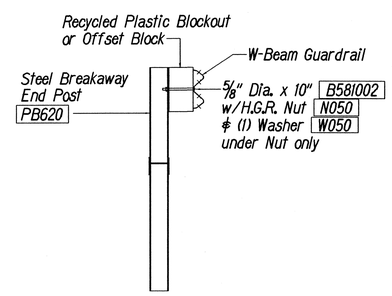

SECTION B-B
typical @ Post 3 thru 8

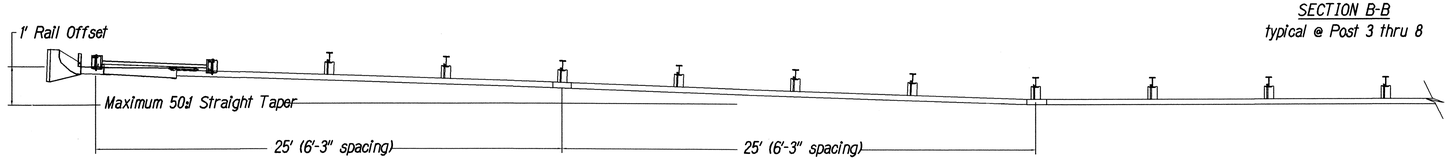

DETAIL A
50:1 flare rate

GENERAL NOTES:

1. Breakaway steel posts are required with the Sequential Kinking Terminal.
2. All bolts, nuts, cable assemblies, cable anchors and bearing plates shall be galvanized.
3. When the Sequential Kinking Terminal is selected as the end treatment for W-Beam Guardrail installation, the W-Beam Guardrail will be flared at a rate of 50:1 to prevent the impact head from encroaching on the shoulder. The flare is not required and may be decreased or eliminated for specific installations.
4. The soil tube shall not protrude more than 4" above ground (measured) along a 5' cord). Site grading may be necessary to meet this requirement.
5. The soil tubes may be driven with an approved driving head. They shall not be driven with the post in the tube. If the soil tubes are placed in drilled holes, the backfill material must be satisfactorily compacted to prevent settlement.
6. When rock is encountered during excavation, a 12" dia. post hole, 20" deep may be used if approved by the Engineer. Granular material will be placed in the bottom of the hole approx. 2 1/2" deep to provide drainage. The soil tubes will be field cut to length, placed in the hole and backfilled with adequately compacted material excavated from the hole.
7. The breakaway cable assembly must be taut. A locking device, (vice grips or channel lock pliers) should be used to prevent the cable from twisting when tightening nuts.
8. A special site evaluation should be considered prior to using the Sequential Kinking Terminal where there is less than 25' between the outlet side of the Sequential Kinking Terminal and any adjacent driving lane.
9. (R) or (L) indicates right or left Impact Head Reflector Marker (IHRM). Providing and installing of IHRM shall be considered incidental to end treatment.
10. The stripes for IHRM shall slope downward at an angle of 45° towards the side of the end treatment that traffic is to pass.

ITEM NO.	QTY.	BILL OF MATERIALS
S3000	1	IMPACT HEAD
S1303/S1305	1	W-BEAM GUARDRAIL END SECTION 12 GA. 12.5' or 25'
G1203/G1205	3/1	W-BEAM GUARDRAIL, 12 GA., 12.5' or 25'
S730	2	*FOUNDATION SOIL TUBE, 6" x 8" x 72"
E750	1	BEARING PLATE
S760	1	CABLE ANCHOR BOX
E770	1	BCT CABLE ANCHOR ASSEMBLY
E780	1	GROUND STRUT
PB620	2	STEEL BREAKAWAY END POSTS
PB621	6	STEEL BREAKAWAY LINE POSTS
	6	RECYCLED PLASTIC BLOCKOUTS OR OFFSET BLOCK
	1	IMPACT HEAD REFLECTOR MARKER - IHRM(R) OR (L)
		HARDWARE
B580122	17/33	5/8" Dia. x 1 1/4" SPLICE BOLTS, POST #2
B580754	2	5/8" Dia. x 7 1/2" HEX BOLTS
B341004	2	3/4" Dia. x 10" HEX BOLTS
B341002	6	5/8" Dia. x 10" H.G.R. BOLT (POST 2 ONLY)
B581802	6	5/8" Dia. x 18" H.G.R. BOLT (POST 3 THRU 8)
N050	26/42	5/8" Dia. H.G.R. NUT (SPLICE 17/33, SOIL TUBES 2, POST 2 THRU 8)
N030	2	3/4" Dia. HEX NUTS
W050	7	H.G.R. WASHER
W030	4	3/4" ID WASHER
N100	2	1" ANCHOR CABLE HEX NUT
W100	2	1" ANCHOR CABLE WASHER
B140404	2	1/4" x 4" HEX BOLT
N014	2	1/4" HEX NUT
W014	4	1/4" WASHER
SB58A	8	CABLE ANCHOR BOX SHOULDER BOLTS
N055A	8	1/2" A325 STRUCTURAL NUTS
W050A	16	11/16" OD x 9/16" ID A325 STR. WASHER

Foundation Tube Options For Posts 1 & 2
*6'-0" Split Foundation Tubes S730
*6'-0" Solid Foundation Tubes E731
*5'-0" Foundation Tubes S735 W/Soil Plates SP600
*4'-6" Foundation Tubes E735 W/Soil Plates SP600

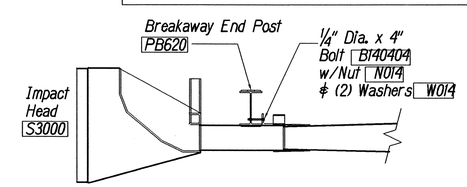

IMPACT HEAD CONNECTION DETAIL

STATE OF HAWAII
DEPARTMENT OF TRANSPORTATION
HIGHWAYS DIVISION

SKT-350

SEQUENTIAL KINKING TERMINAL

VOLCANO ROAD RESURFACING
VICINITY OF MOUNTAIN VIEW SCHOOL
PROJECT NO. 11M-02-02M

Scale: As Shown Date: Jan., 1997

SHEET No. 16 OF 18 SHEETS

ORIGINAL PLAN | SURVEY PLOTTED BY | DRAWN BY | TRACED BY | DESIGNED BY | QUANTITIES BY | CHECKED BY | DATE
NOTE BOOK No. | DESIGN FILE No. 30.dgn

13/28/01 tdrudy quardrail/skt350.dgn (Stand Plan TE-61 r11/03/89 & TE-62 r09/01/87)

FED. ROAD DIST. NO.	STATE	PROJ. NO.	FISCAL YEAR	SHEET NO.	TOTAL SHEETS
HAWAI'I	HAW.	11M-02-02M	2002	57	58

NOTE:
INSTALL RAIL PARALLEL TO ROADWAY EDGE LINE. WHEN TAPER IS REQUIRED BY DESIGN ENGINEER, A 50:1 TAPER OVER THE LENGTH OF SYSTEM IS ALLOWABLE.

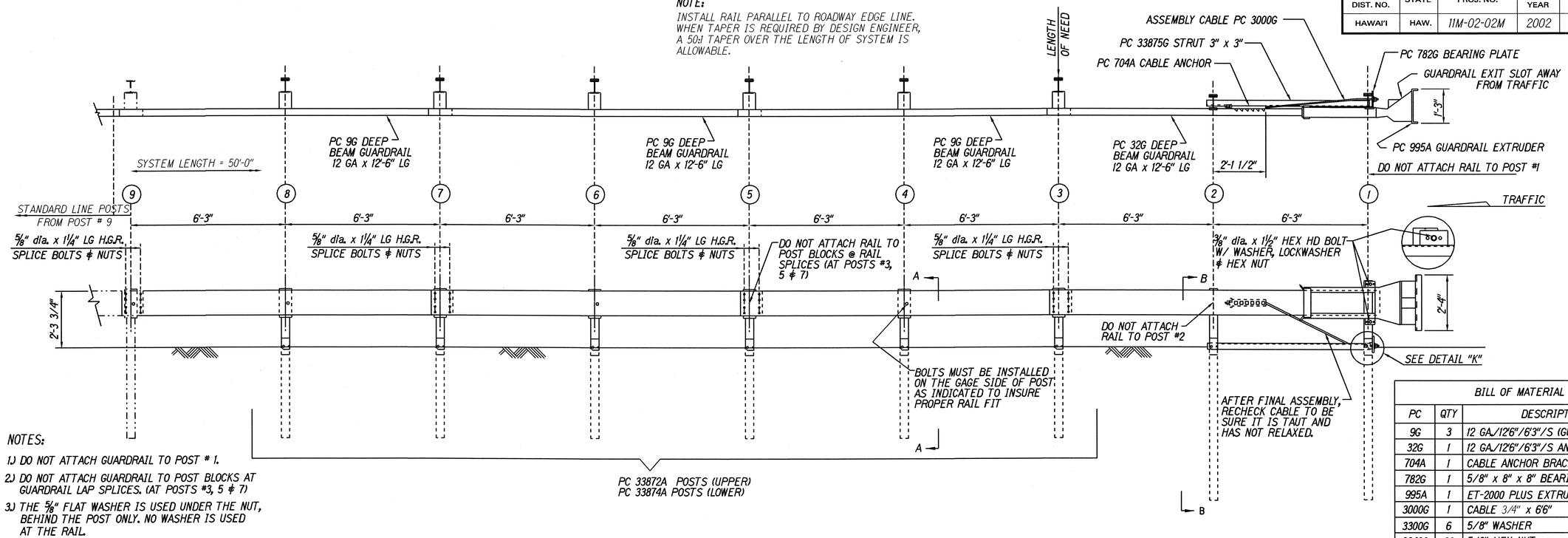

NOTES:

1.) DO NOT ATTACH GUARDRAIL TO POST # 1.

2.) DO NOT ATTACH GUARDRAIL TO POST BLOCKS AT GUARDRAIL LAP SPLICES. (AT POSTS #3, 5 & 7)

3.) THE 5/8" FLAT WASHER IS USED UNDER THE NUT, BEHIND THE POST ONLY. NO WASHER IS USED AT THE RAIL.

4.) MANUFACTURER SUGGESTS CUSTOMER TO PROVIDE REFLECTORIZATION OF TERMINAL.

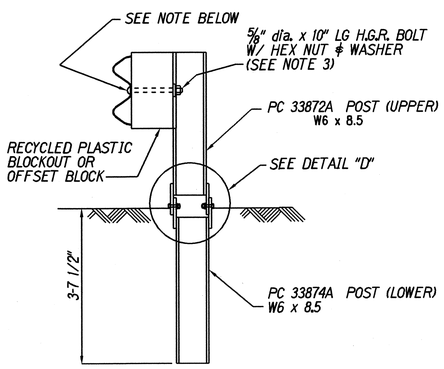

NOTE:
SECTION "A-A" IS SIMILAR @ POST #3, 5 & 7. EXCEPT RAIL IS NOT ATTACHED.

SECTION "A-A"
(TYP @ POSTS #4, 6 & 8)

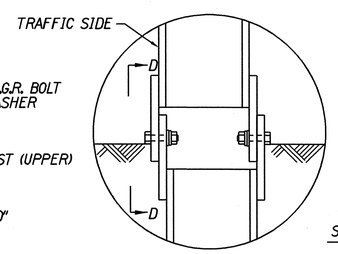

DETAIL "D"

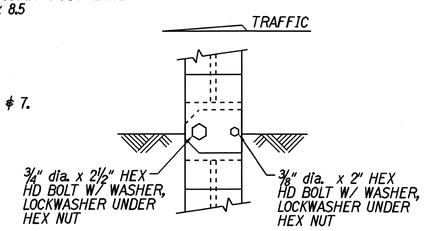

VIEW "D-D"

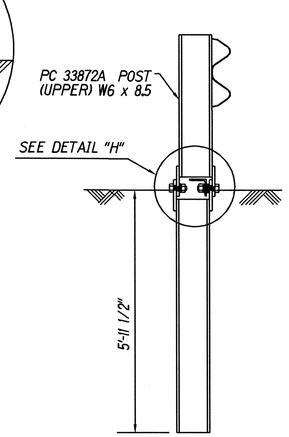

SECTION "B-B"
(POST #2)

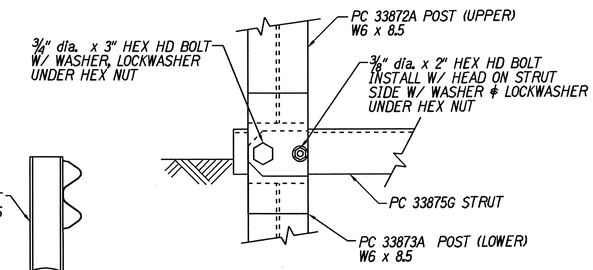

VIEW "H-H"

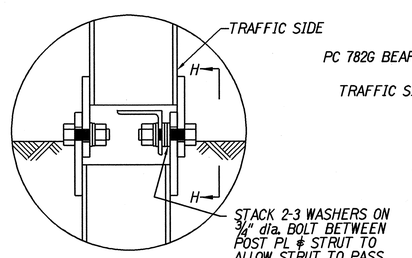

DETAIL "H"
(POST #2)

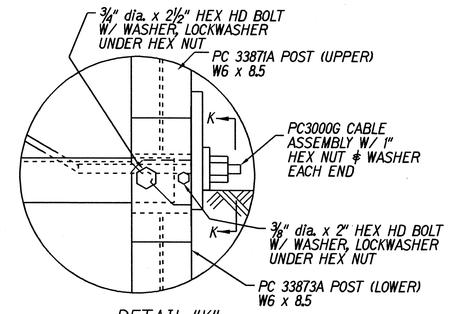

DETAIL "K"
(POST #1)

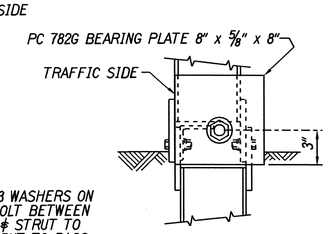

VIEW "K-K"

BILL OF MATERIAL

PC	QTY	DESCRIPTION
9G	3	12 GA/12'6"/6'3"/S (GUARDRAIL)
32G	1	12 GA/12'6"/6'3"/S ANC (GUARDRAIL)
704A	1	CABLE ANCHOR BRACKET
782G	1	5/8" x 8" x 8" BEARING PLATE
995A	1	ET-2000 PLUS EXTRUDER
3000G	1	CABLE 3/4" x 6'6"
3300G	6	5/8" WASHER
3340G	38	5/8" HEX NUT
3360G	32	5/8" dia. x 1 1/4" SPLICE BOLT
3500G	6	5/8" dia. x 10" POST BOLT
3701G	19	3/4" WASHER
3704G	16	3/4" HEX NUT
3717G	15	3/4" dia. x 2 1/2" HEX HD BOLT
3718G	1	3/4" dia. x 3" HEX HD BOLT
3900G	2	1" WASHER
3910G	2	1" HEX NUT
5326B	6	RECYCLED PLASTIC BLOCKOUT OR OFFSET BLOCK
4254G	18	3/8" WASHER
4255G	2	3/8" FENDER WASHERS
4258G	16	3/8" LOCKWASHER
4261G	2	3/8" dia. x 1 1/2" HEX HD BOLT
4699G	16	3/4" LOCKWASHER
6321G	16	3/8" dia. x 2" HEX HD BOLT
6405G	18	3/8" HEX NUT
33871A	1	ET2000 HBA POST #1 TOP
33872A	7	ET2000 HBA POST #2-#8 TOP
33873A	2	ET2000 HBA POST #1-#2 BOTTOM
33874A	6	ET2000 HBA POST #3-#8 BOTTOM
33875G	1	6'-6" ANGLE STRUT ET HBA

STATE OF HAWAI'I
DEPARTMENT OF TRANSPORTATION
HIGHWAYS DIVISION

ET-2000 PLUS

VOLCANO ROAD RESURFACING
VICINITY OF MOUNTAIN VIEW SCHOOL
PROJECT NO. 11M-02-02M

Scale: As Noted Date: April, 2002

SHEET No. 17 OF 18 SHEETS

ORIGINAL PLAN | SURVEY PLOTTED BY | DRAWN BY | TRACED BY | DESIGNED BY | QUANTITIES BY | CHECKED BY | DATE | NOTE BOOK No.

8/1/00 hdl:ruby:guardrail:et2000.dgn

FED. ROAD DIST.	STATE	PROJ. NO.	FISCAL YEAR	SHEET NO.	TOTAL SHEETS
HAWAII	HAW.	11M-02-02M	2002	58	58

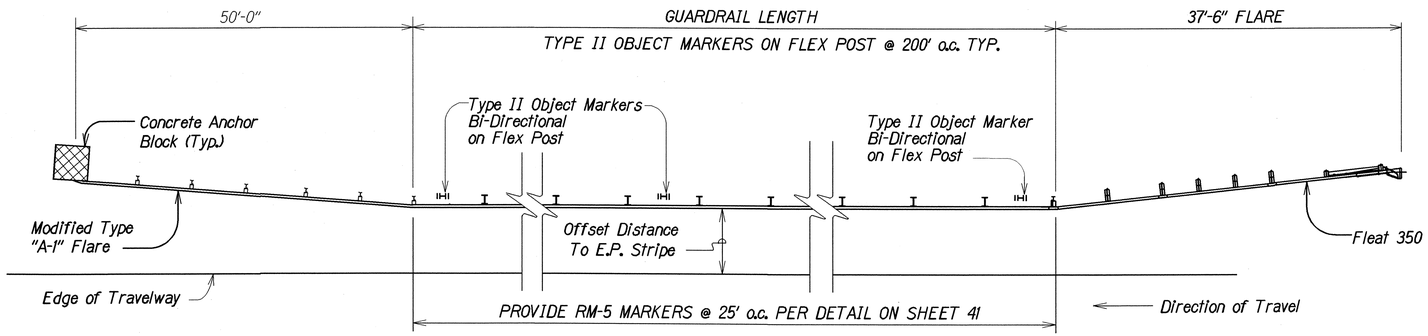

TYPICAL @ "MODIFIED A" & "FLEAT 350" END TREATMENT

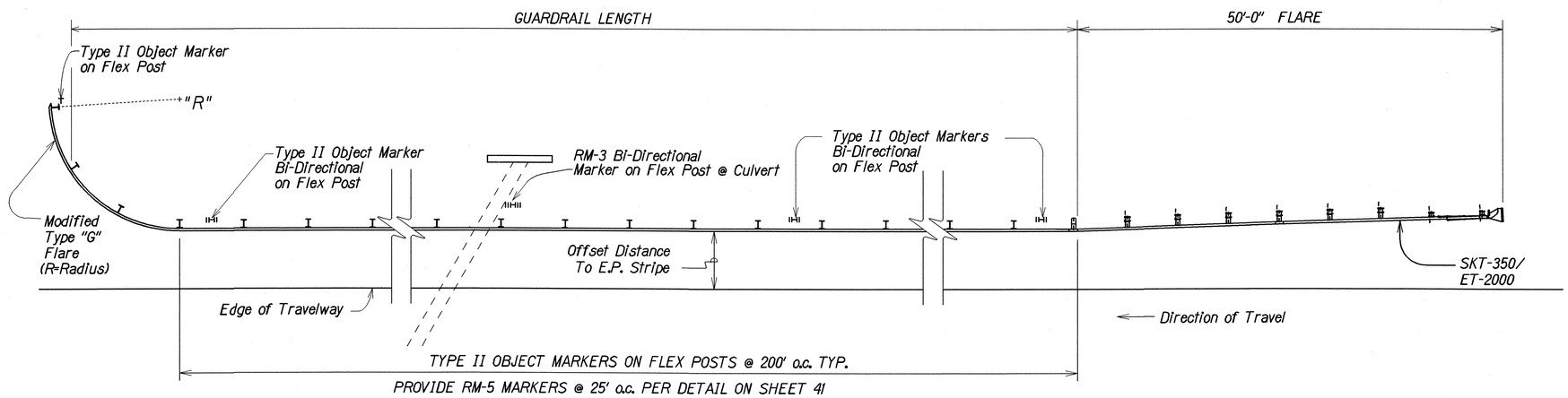

TYPICAL @ MODIFIED "G" & "SKT-350"/"ET-2000" END TREATMENT

NOTES:

1. All Reflector Markers located behind guardrail and other locations shall be installed with flexible delineator posts.
2. Exact location of Reflector Markers shall be determined in the field by the Engineer.
3. Color of flexible delineator posts shall be white, except Type II bi-directional Object Markers shall be yellow posts.
4. Type II bi-directional Object Markers shall be white in color.
5. RM-5 shall be per Standard Guardrail Details.

TYPICAL GUARDRAIL REFLECTOR MARKER INSTALLATION

Not To Scale

ORIGINAL PLAN	SURVEY PLOTTED BY	DATE
	DRAWN BY	
	TRACED BY	
NOTE BOOK	DESIGNED BY	
	QUANTITIES BY	
No.	CHECKED BY	

13:12:02 he3:\usr2\Hawaii District Project Plans\Guardrail Details\04hwyRMdet.dgn

STATE OF HAWAII
DEPARTMENT OF TRANSPORTATION
HIGHWAYS DIVISION

GUARDRAIL REFLECTOR MARKER DETAIL

VOLCANO ROAD RESURFACING
VICINITY OF MOUNTAIN VIEW SCHOOL
PROJECT NO. 11M-02-02M

Scale: none — Date: April, 2002