FED. ROAD DIST. NO.	STATE	FED. AID PROJ. NO.	FISCAL YEAR	SHEET NO.	TOTAL SHEETS
HAWAII	HAW.	STP-011-1(23)	1998	4	6

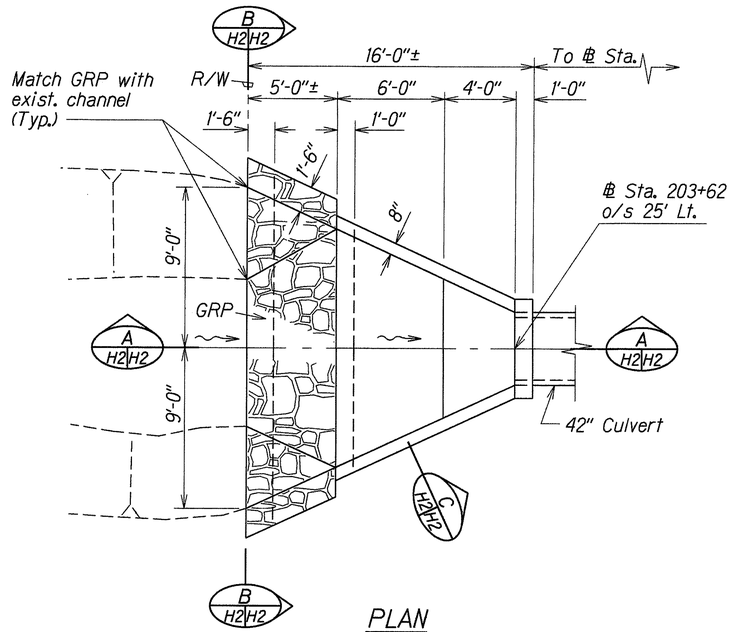

PLAN
Scale: 1/4"=1'-0"

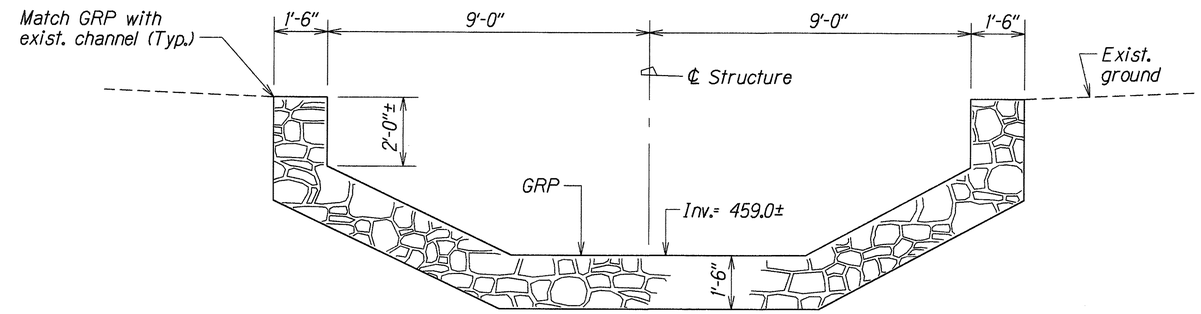

SECTION B H2|H2
Scale: 1/2"=1'-0"

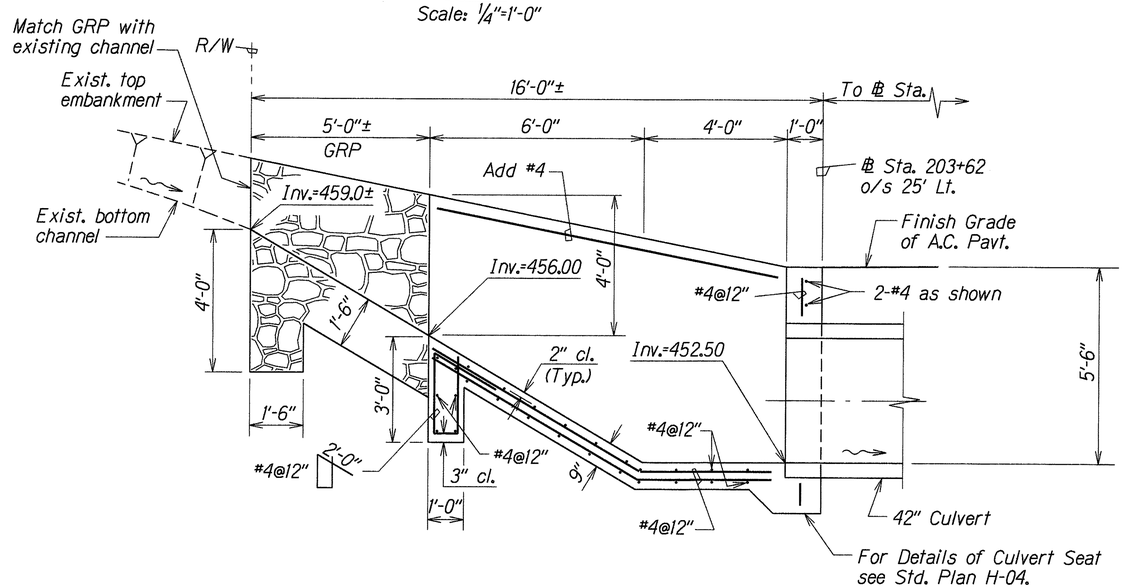

SECTION A H2|H2
Scale: 1/2"=1'-0"

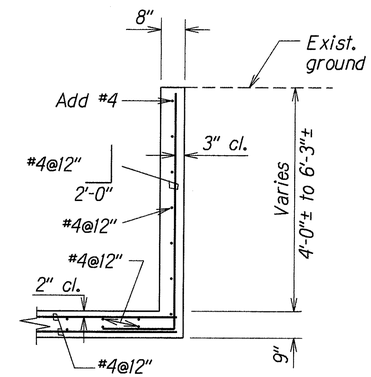

SECTION C H2|H2
Scale: 1/2"=1'-0"

DETAILS OF INLET STRUCTURE

ORIGINAL PLAN	SURVEY PLOTTED BY	DATE 3/16/98
	DRAWN BY A. Nomura	
	TRACED BY	
NOTE BOOK	PROOFREAD BY C. Matsuda	
dh3curtis2wk	QUANTITIES BY	
kekihotl.dgn	CHECKED BY	

STATE OF HAWAII
DEPARTMENT OF TRANSPORTATION
HIGHWAYS DIVISION

DRAINAGE DETAILS

KUAKINI HIGHWAY DRAINAGE IMPROVEMENTS
Vicinity of Kaumalumalu Stream
Fed. Aid. Project No. STP-011-1(23)

Scale: As Shown — Date: Apr. 1998

SHEET No. H2 OF 3 SHEETS

FED. ROAD DIST. NO.	STATE	FED. AID PROJ. NO.	FISCAL YEAR	SHEET NO.	TOTAL SHEETS
HAWAII	HAW.	STP-011-1(23)	1998	5	6

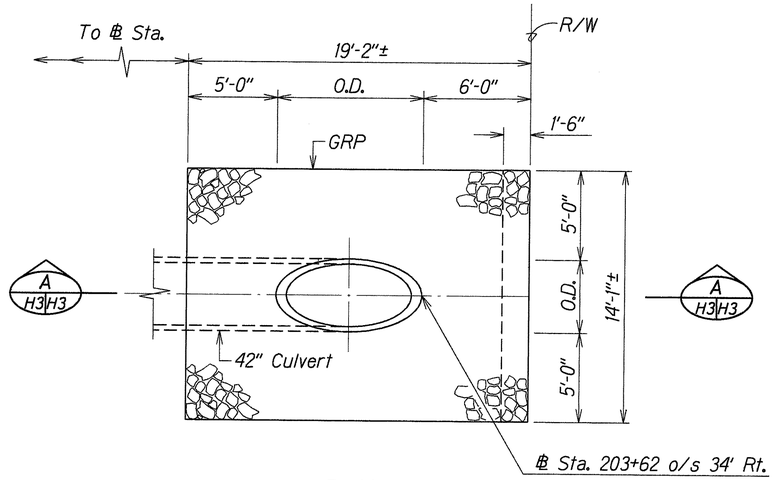

PLAN

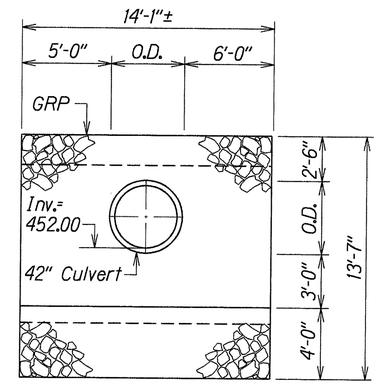

SECTION B H3 H3

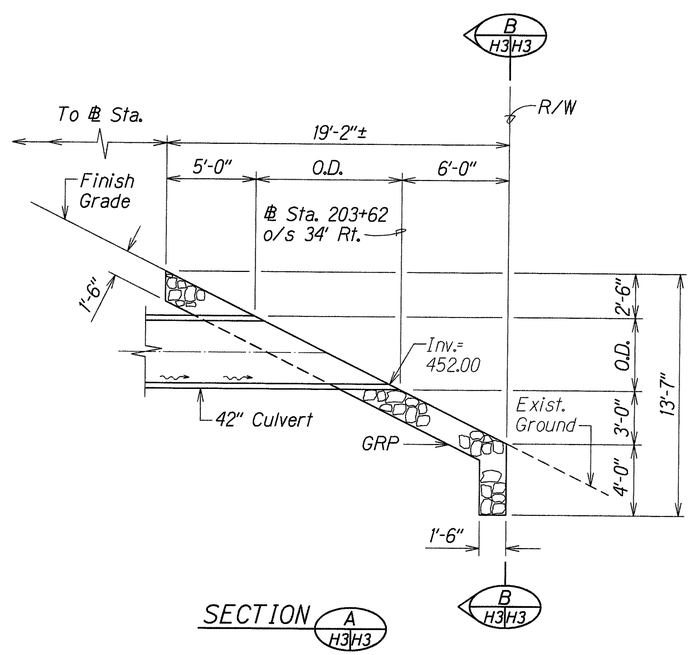

SECTION A H3 H3

DETAILS OF GRP OUTLET STRUCTURE

ORIGINAL PLAN	SURVEY PLOTTED BY	DATE 2-17-98
	DRAWN BY R. Sato	
	TRACED BY	
NOTE BOOK	DESIGNED BY G. Matsuda	
	QUANTITIES BY	
No.	CHECKED BY	

STATE OF HAWAII
DEPARTMENT OF TRANSPORTATION
HIGHWAYS DIVISION

DRAINAGE DETAILS

KUAKINI HIGHWAY DRAINAGE IMPROVEMENTS
Vicinity of Kaumalumalu Stream
Fed. Aid Project No. STP-011-1(23)

Scale: 1/4"=1'-0" Date: Apr. 1998

SHEET No. H3 OF 3 SHEETS