FED. ROAD DIST. NO.	STATE	FED. AID PROJ. NO.	FISCAL YEAR	SHEET NO.	TOTAL SHEETS
HAWAII	HAW.	CMAQ-0100(62)	2004	54	86

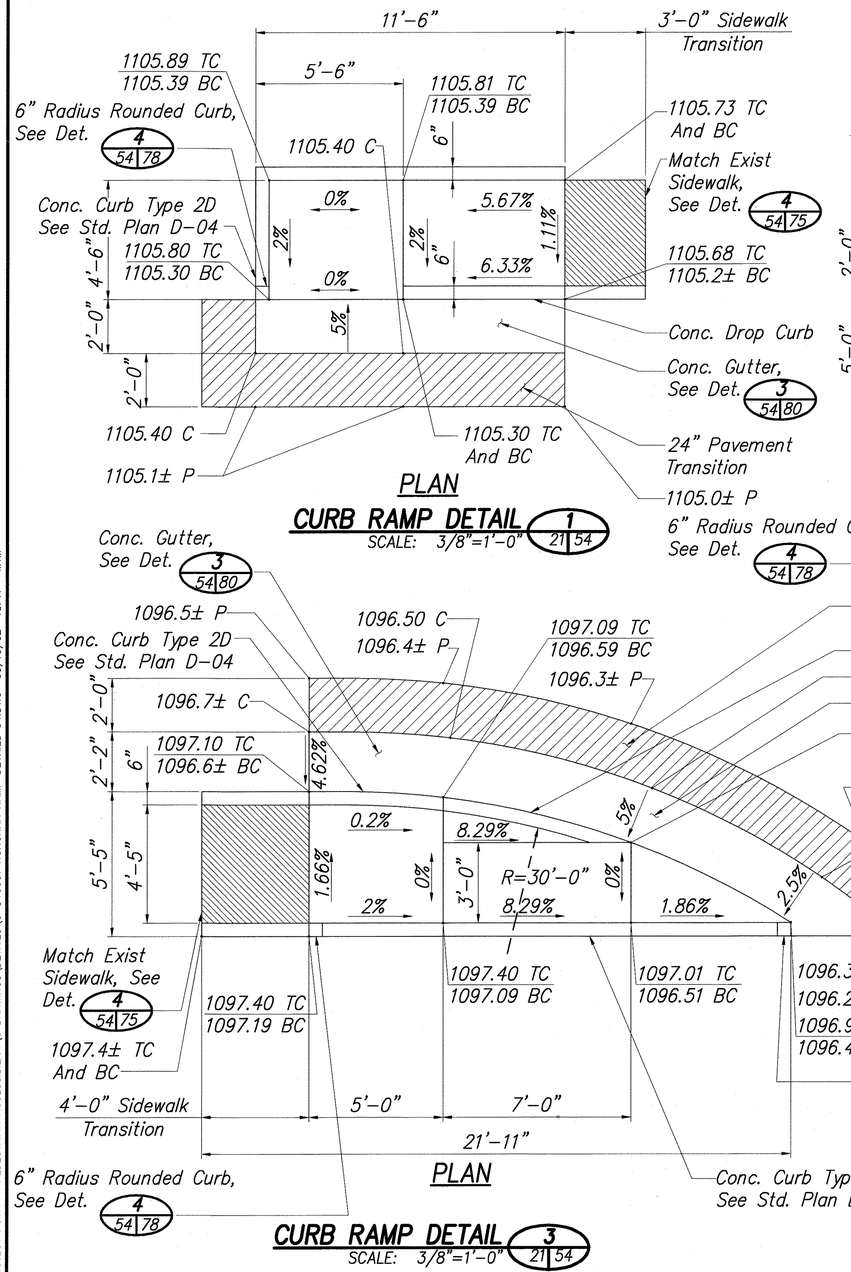

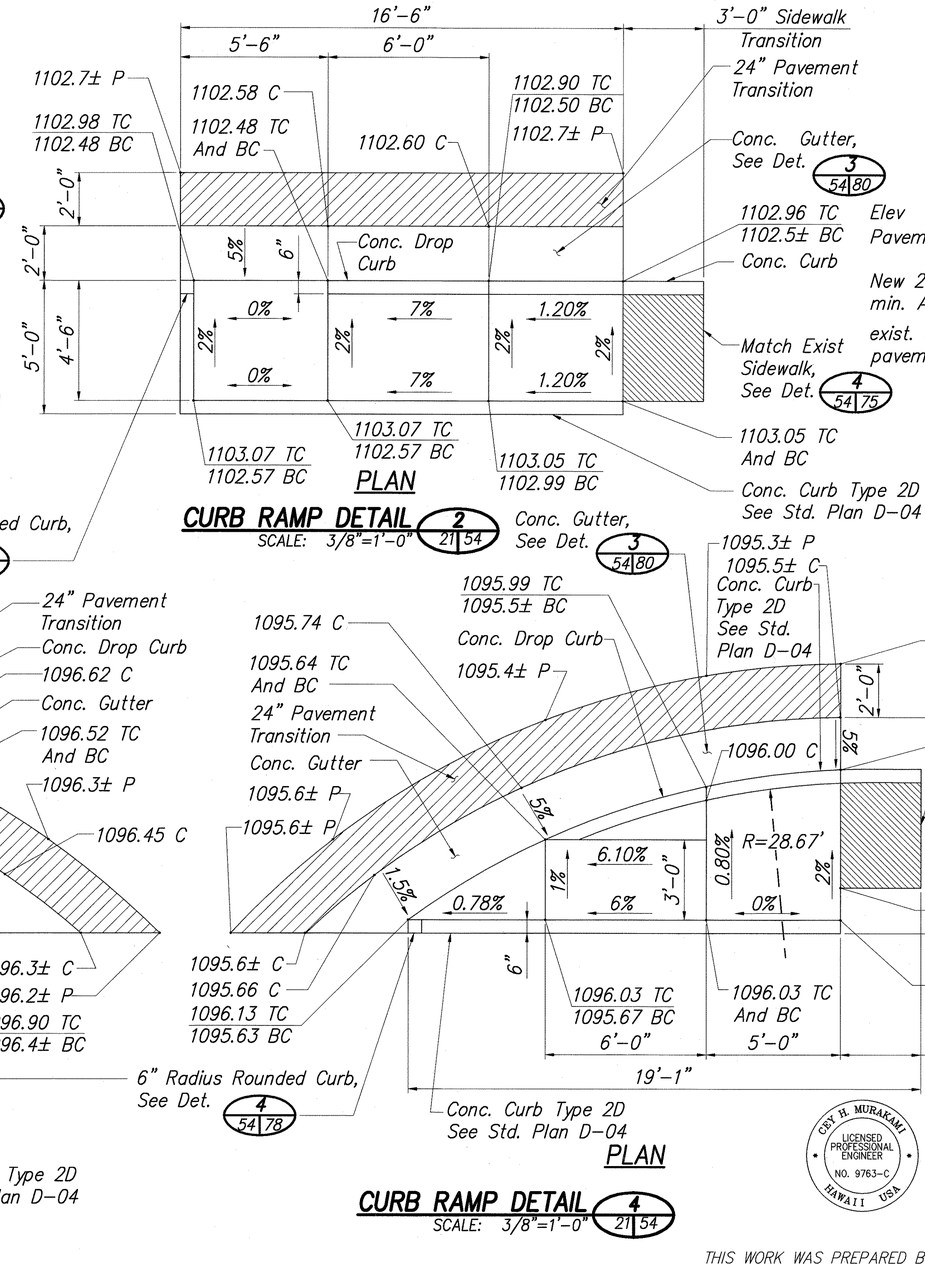

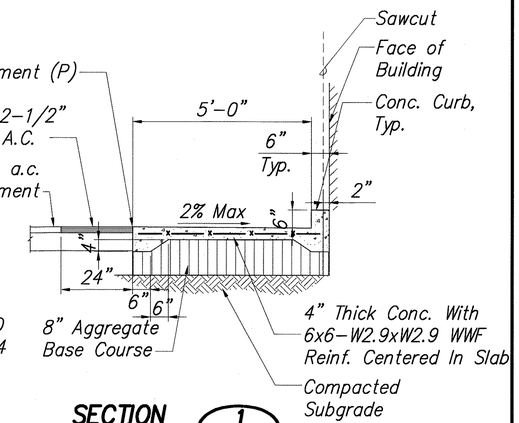

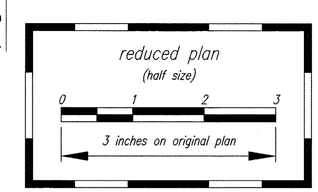

CEY H. MURAKAMI
LICENSED PROFESSIONAL ENGINEER
NO. 9763-C
HAWAII USA

THIS WORK WAS PREPARED BY ME OR UNDER MY SUPERVISION

Cey H. Murakami 04/30/06
SIGNATURE EXPIRATION DATE OF THE LICENSE

STATE OF HAWAII
DEPARTMENT OF TRANSPORTATION
HIGHWAYS DIVISION

HONOKAA – RAMP DETAILS-1

PEDESTRIAN ACCESSIBILITY ROUTE IMPROVEMENTS – HONOKAA, HAWI, AND KAPAAU
Federal Aid Project No. CMAQ-0100(62)
Scale: AS NOTED Date: SEPT. 2004

SHEET No. 54 OF 86 SHEETS

ORIGINAL PLAN			
	SURVEY PLOTTED BY	DL	9/2004
	TRACED BY	DL	" 9/2004
NOTE BOOK	DESIGNED BY	CM	" 9/2004
	QUANTITIES BY	TC	" 9/2004
No.	CHECKED BY	BS	" 9/2004

I:\2000\2000_070.000 PROJECT POINT – PEDESTRIAN ACCESSIBILITY\G DRAWINGS\DETAILS\C-DT0001 HONOKAA RAMP DETAILS 54.DWG 05/15/02 18:41 MTM

FED. ROAD DIST. NO.	STATE	FED. AID PROJ. NO.	FISCAL YEAR	SHEET NO.	TOTAL SHEETS
HAWAII	HAW.	CMAQ-0100(62)	2004	55	86

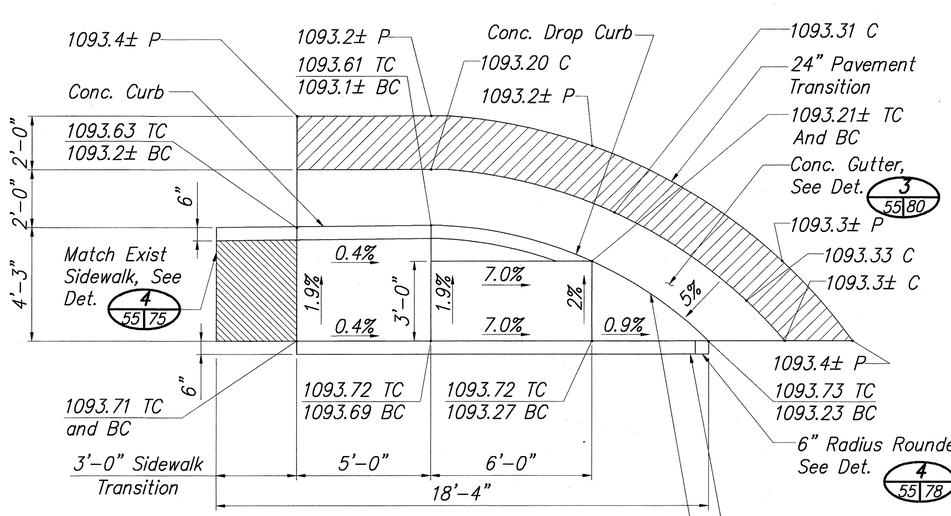

PLAN

CURB RAMP DETAIL 1
SCALE: 3/8"=1'-0" 21|55

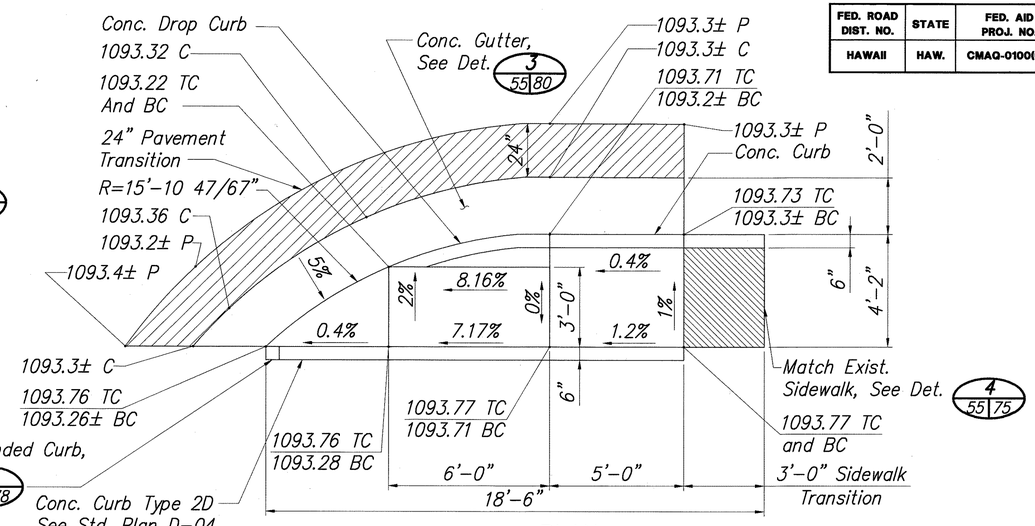

PLAN

CURB RAMP DETAIL 2
SCALE: 3/8"=1'-0" 21|55

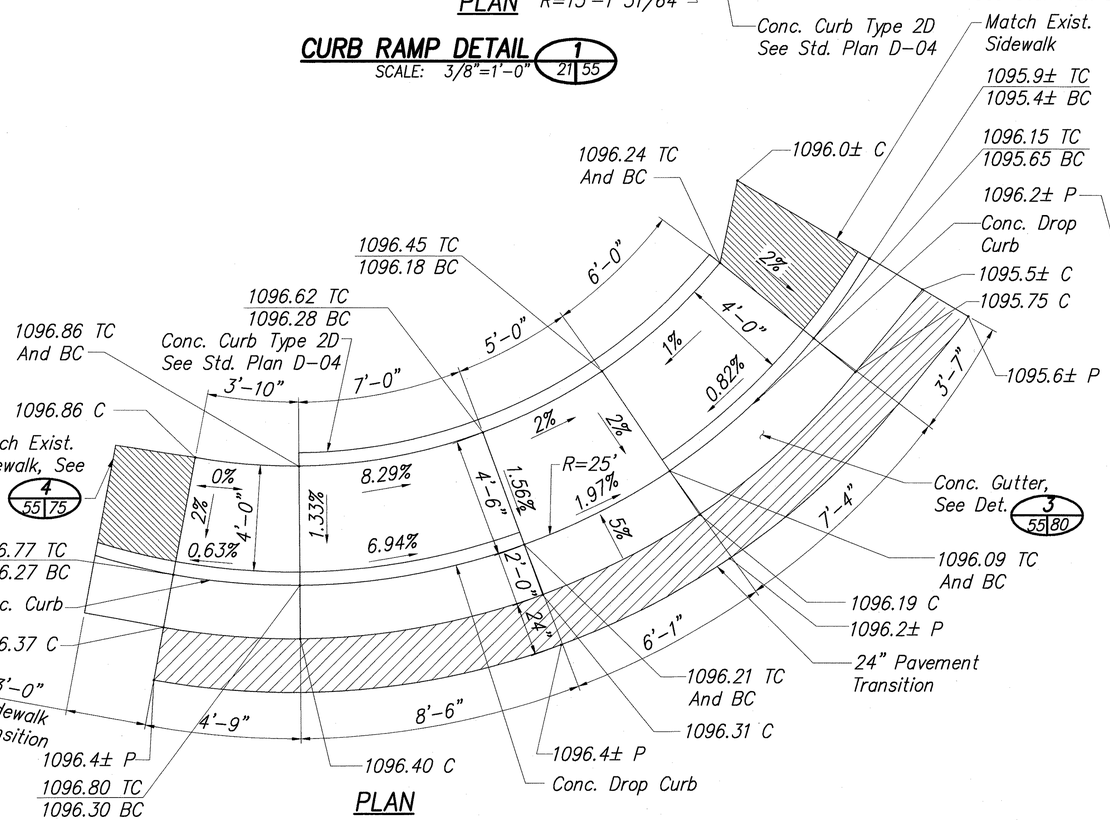

PLAN

CURB RAMP DETAIL 3
SCALE: 3/8"=1'-0" 22|55

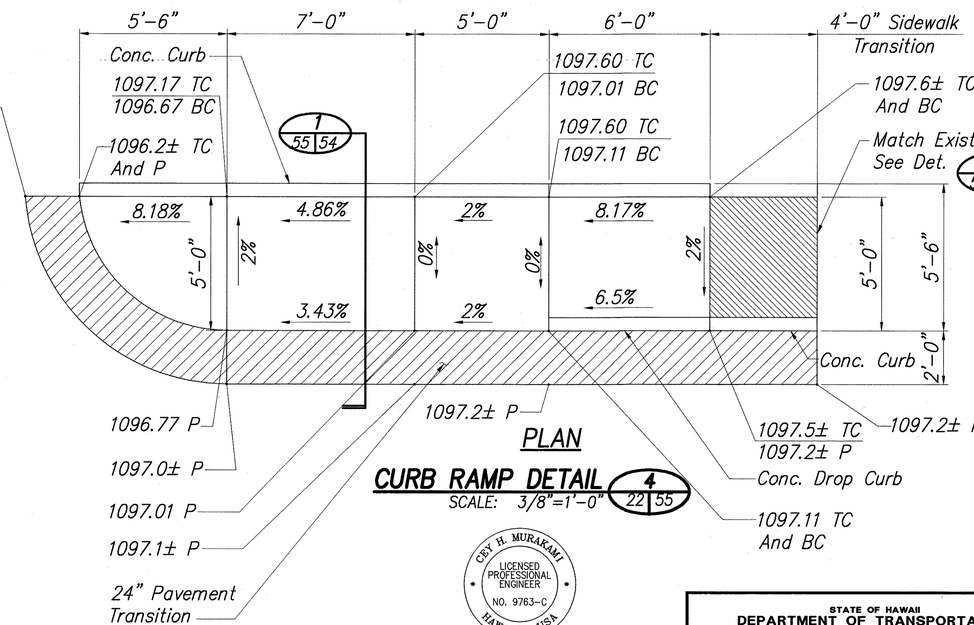

PLAN

CURB RAMP DETAIL 4
SCALE: 3/8"=1'-0" 22|55

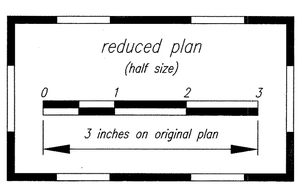

CEY H. MURAKAMI
LICENSED PROFESSIONAL ENGINEER
NO. 9763-C
HAWAII USA

THIS WORK WAS PREPARED BY ME OR UNDER MY SUPERVISION

SIGNATURE — EXPIRATION DATE OF THE LICENSE 04/30/06

STATE OF HAWAII
DEPARTMENT OF TRANSPORTATION
HIGHWAYS DIVISION

HONOKAA – RAMP DETAILS-2

PEDESTRIAN ACCESSIBILITY ROUTE IMPROVEMENTS – HONOKAA, HAWI, AND KAPAAU
Federal Aid Project No. CMAQ-0100(62)

Scale: AS NOTED Date: SEPT. 2004

SHEET No. 55 OF 86 SHEETS

ORIGINAL PLAN		
SURVEY PLOTTED BY		DATE
SURVEY BY	DL	9/2004
TRACED BY	DL	" 9/2004
DESIGNED BY	CM	" 9/2004
QUANTITIES BY	TC	" 9/2004
CHECKED BY	BS	" 9/2004
NOTE BOOK		
No.		

I:\2000\2000_070.000 PROJECT POINT – PEDESTRIAN ACCESSIBILITY\G DRAWINGS\DETAILS\C-DT0002 HONOKAA RAMP DETAILS 55.DWG 05/13/02 09:33 DaY

FED. ROAD DIST. NO.	STATE	FED. AID PROJ. NO.	FISCAL YEAR	SHEET NO.	TOTAL SHEETS
HAWAII	HAW.	CMAQ-0100(62)	2004	56	86

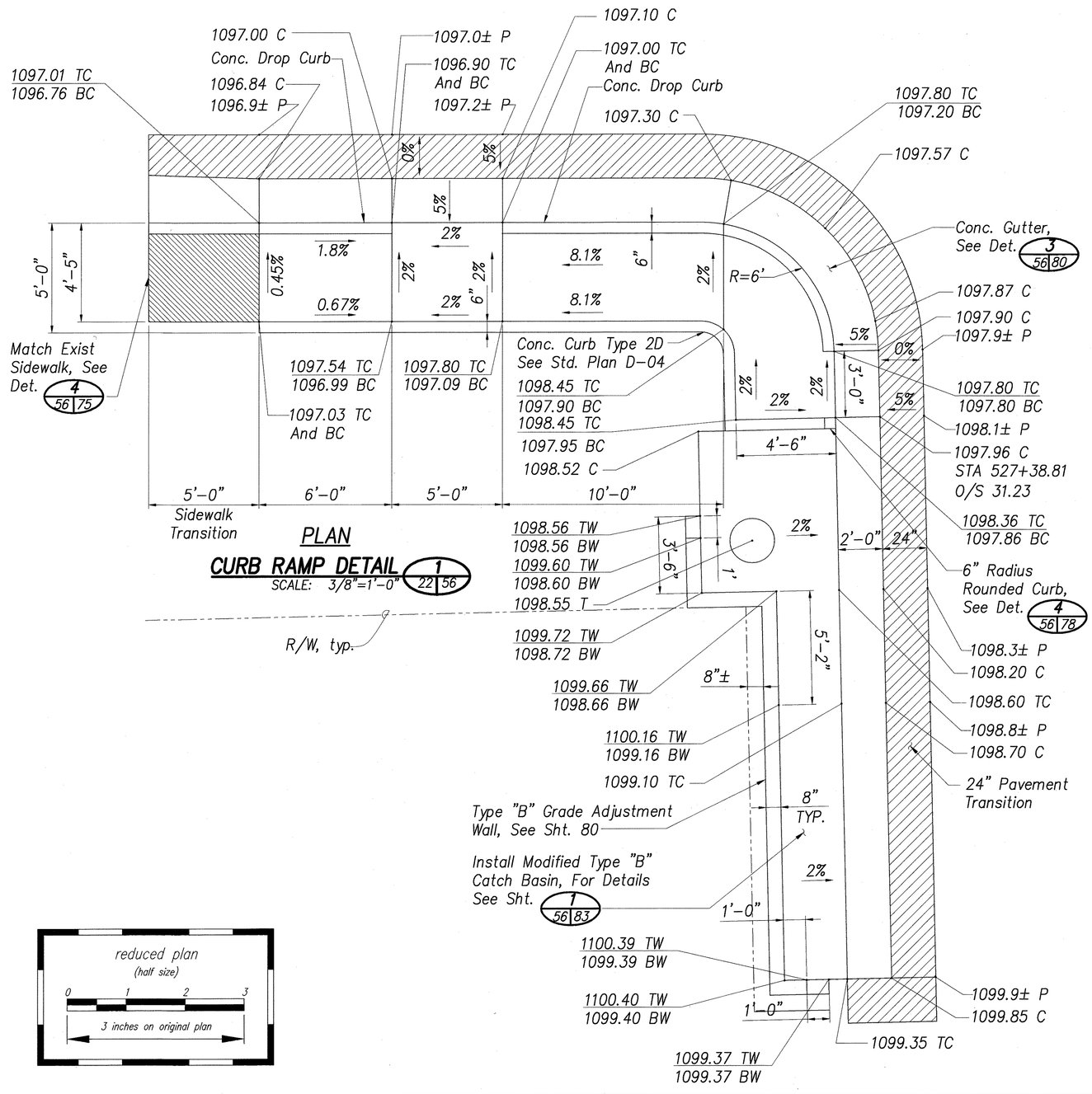

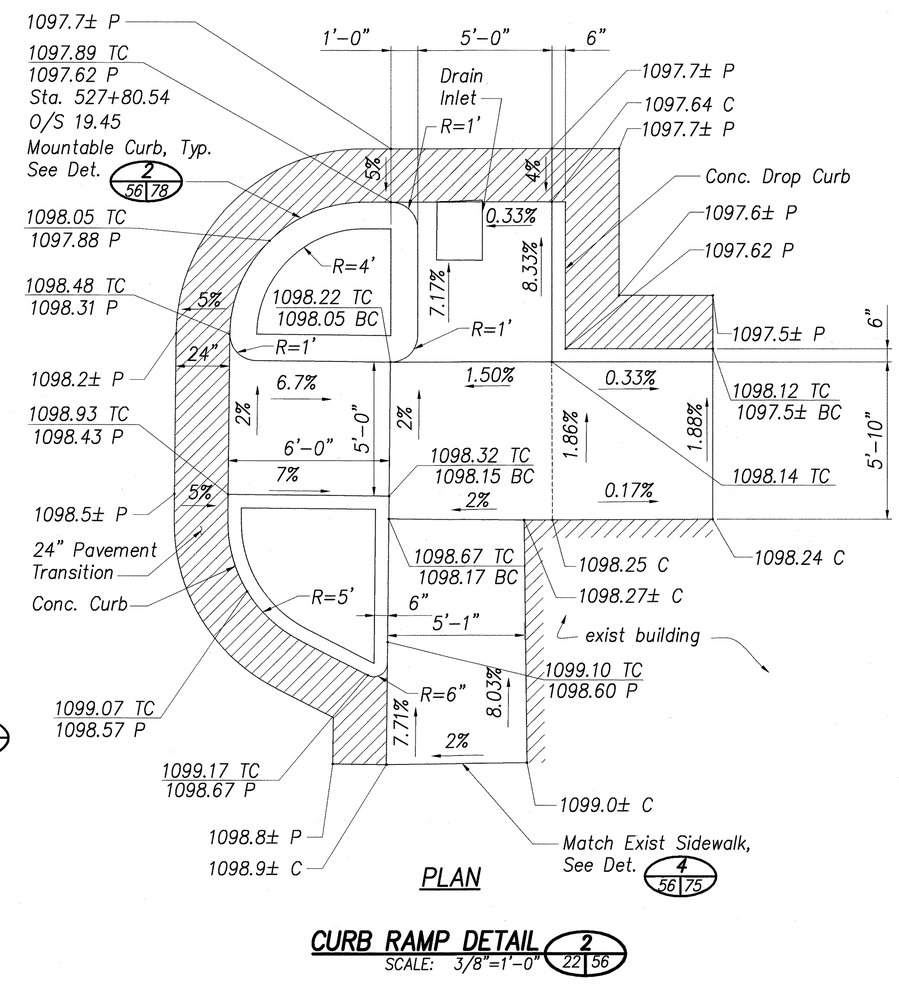

ORIGINAL PLAN			
NOTE BOOK	SURVEY PLOTTED BY	DL	9/2004
	DRAWN BY	"	9/2004
	TRACED BY	DL	9/2004
	DESIGNED BY	CM	9/2004
	QUANTITIES BY	YS	9/2004
No.	CHECKED BY	ES	9/2004

I:\2000\2000_070.000 PROJECT POINT - PEDESTRIAN ACCESSIBILITY\G DRAWINGS\DETAILS\G-DT0003 HONOKAA RAMP DETAILS 56.DWG 11/08/02 17:09 TKC

CEY H. MURAKAMI
LICENSED PROFESSIONAL ENGINEER
NO. 9763-C
HAWAII USA

THIS WORK WAS PREPARED BY ME OR UNDER MY SUPERVISION

Cey H. Murakami 04/30/06
SIGNATURE EXPIRATION DATE OF THE LICENSE

STATE OF HAWAII
DEPARTMENT OF TRANSPORTATION
HIGHWAYS DIVISION

HONOKAA – RAMP DETAILS–3

PEDESTRIAN ACCESSIBILITY ROUTE IMPROVEMENTS – HONOKAA, HAWI, AND KAPAAU
Federal Aid Project No. CMAQ–0100(62)
Scale: AS NOTED Date: SEPT. 2004

SHEET No. 56 OF 86 SHEETS

FED. ROAD DIST. NO.	STATE	FED. AID PROJ. NO.	FISCAL YEAR	SHEET NO.	TOTAL SHEETS
HAWAII	HAW.	CMAQ-0100(62)	2004	57	86

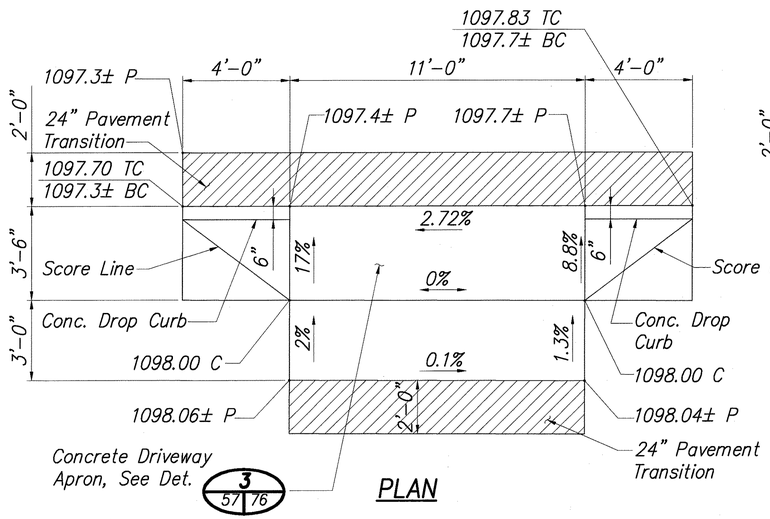

PLAN

DRIVEWAY DETAIL 1 (22|57)
SCALE: 3/8"=1'-0"

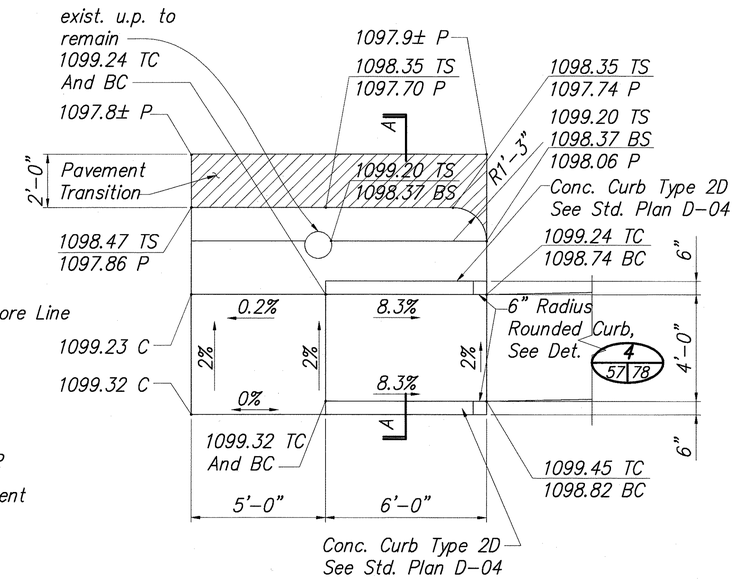

PLAN

TRANSITION RAMP DETAIL 3 (23|57)
SCALE: 3/8"=1'-0"

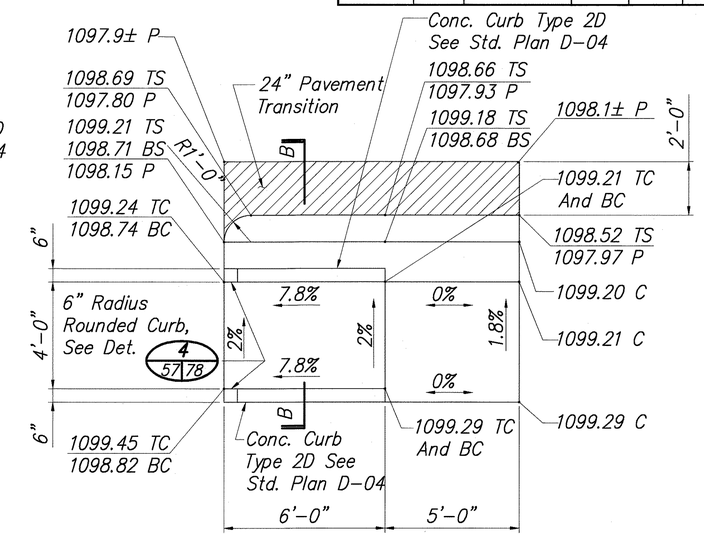

PLAN

TRANSITION RAMP DETAIL 4 (23|57)
SCALE: 3/8"=1'-0"

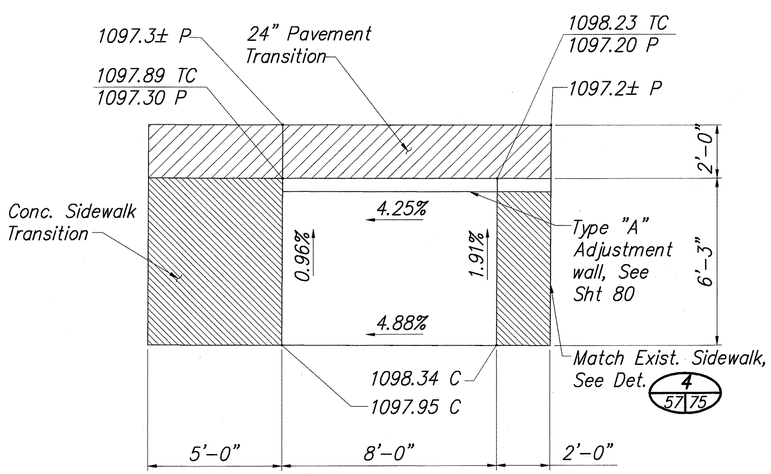

PLAN

TRANSITION RAMP DETAIL 2 (23|57)
SCALE: 3/8"=1'-0"

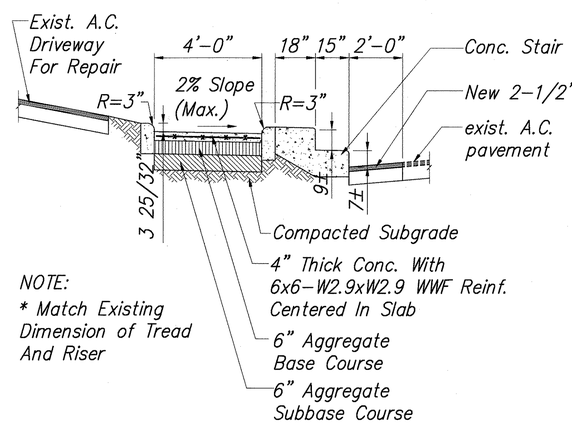

NOTE:
* Match Existing Dimension of Tread And Riser

SECTION A-A

NOTE:
* Match Existing Dimension of Tread And Riser

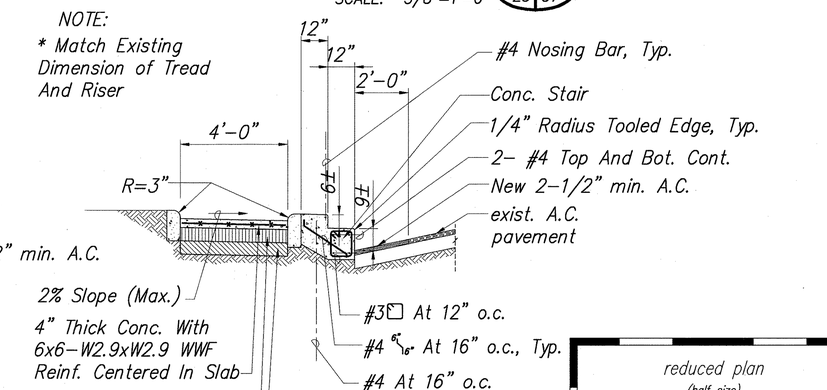

SECTION B-B

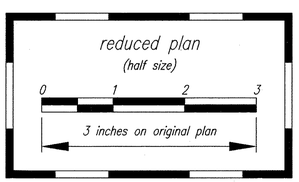

CEY H. MURAKAMI
LICENSED PROFESSIONAL ENGINEER
NO. 9763-C
HAWAII USA

THIS WORK WAS PREPARED BY ME OR UNDER MY SUPERVISION

SIGNATURE — EXPIRATION DATE OF THE LICENSE 04/30/06

STATE OF HAWAII
DEPARTMENT OF TRANSPORTATION
HIGHWAYS DIVISION

HONOKAA - RAMP DETAILS-4

PEDESTRIAN ACCESSIBILITY ROUTE IMPROVEMENTS - HONOKAA, HAWI, AND KAPAAU
Federal Aid Project No. CMAQ-0100(62)
Scale: AS NOTED Date: SEPT. 2004

SHEET No. 57 OF 86 SHEETS

ORIGINAL PLAN	SURVEY PLOTTED BY	DL	DATE 9/2004
	TRACED BY	DL	" 9/2004
	DESIGNED BY	CM	" 9/2004
NOTE BOOK	QUANTITIES BY	TC	" 9/2004
No.	CHECKED BY	RS	" 9/2004

I:\2000\2000_070.000 PROJECT POINT - PEDESTRIAN ACCESSIBILITY\G DRAWINGS\DETAILS\C-DT0004 HONOKAA RAMP DETAILS 57.DWG 05/15/02 19:11 MTM

FED. ROAD DIST. NO.	STATE	FED. AID PROJ. NO.	FISCAL YEAR	SHEET NO.	TOTAL SHEETS
HAWAII	HAW.	CMAQ-0100(62)	2004	58	86

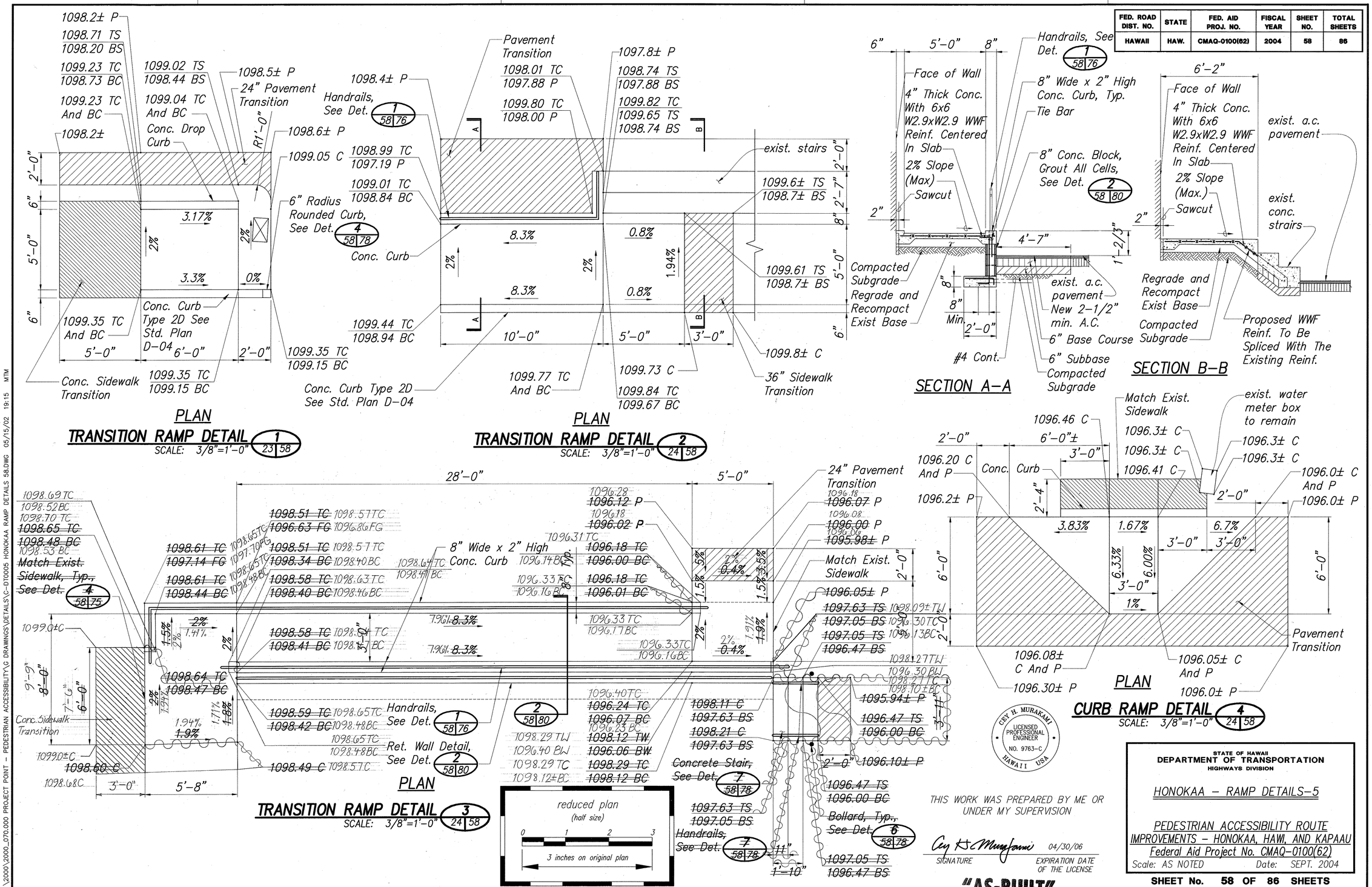

FED. ROAD DIST. NO.	STATE	FED. AID PROJ. NO.	FISCAL YEAR	SHEET NO.	TOTAL SHEETS
HAWAII	HAW.	CMAQ-0100(62)	2004	59	86

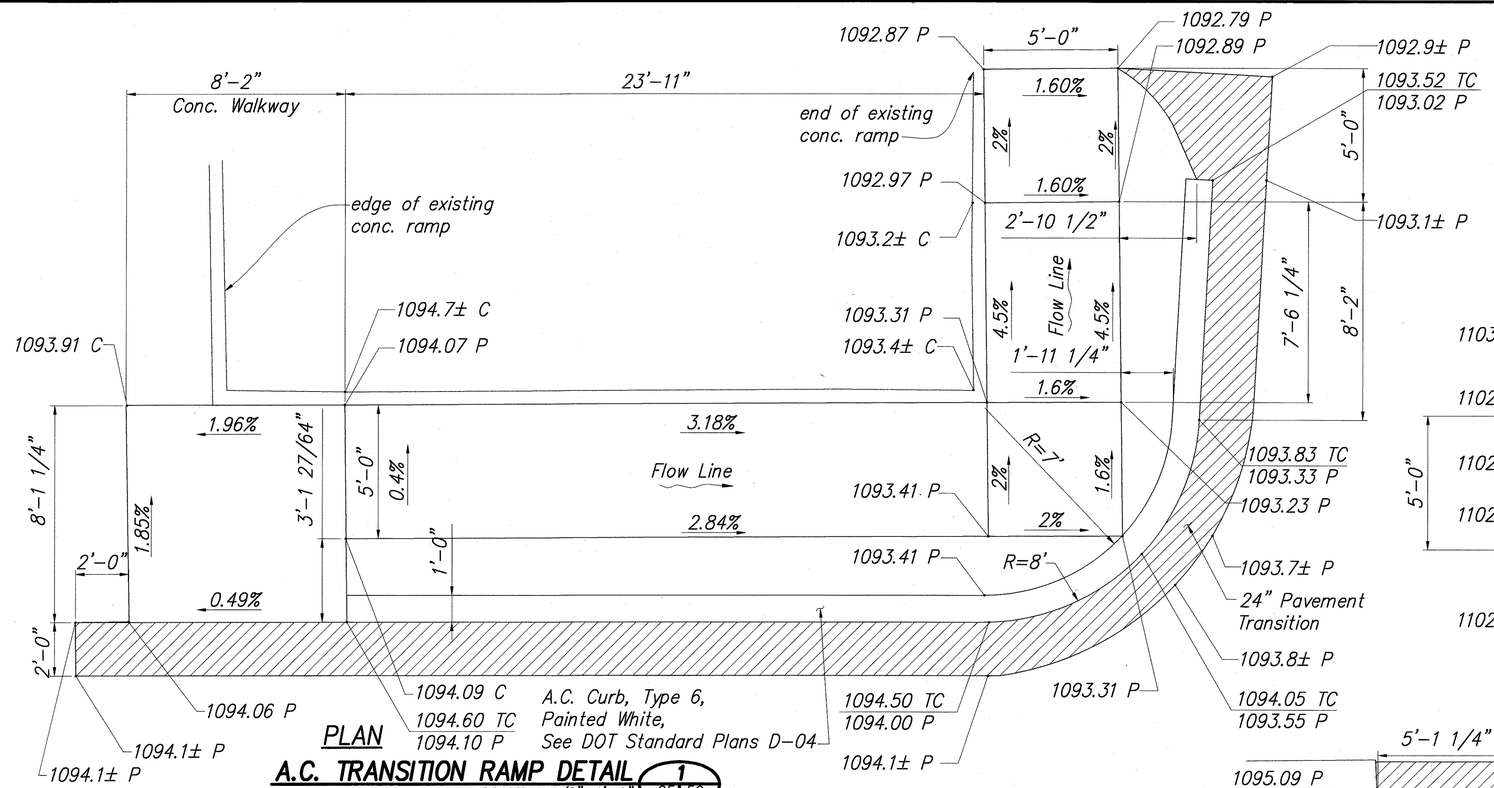

PLAN

A.C. TRANSITION RAMP DETAIL (1 / 25 59)

SCALE: 3/8"=1'-0"

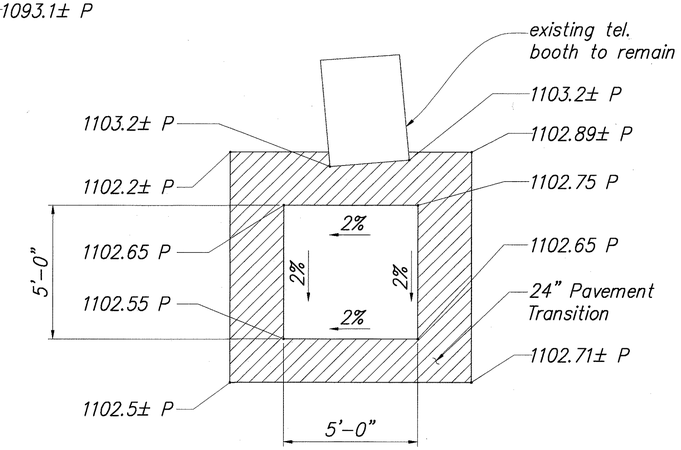

PLAN

AC LANDING DETAIL (2 / 27 59)

SCALE: 3/8"=1'-0"

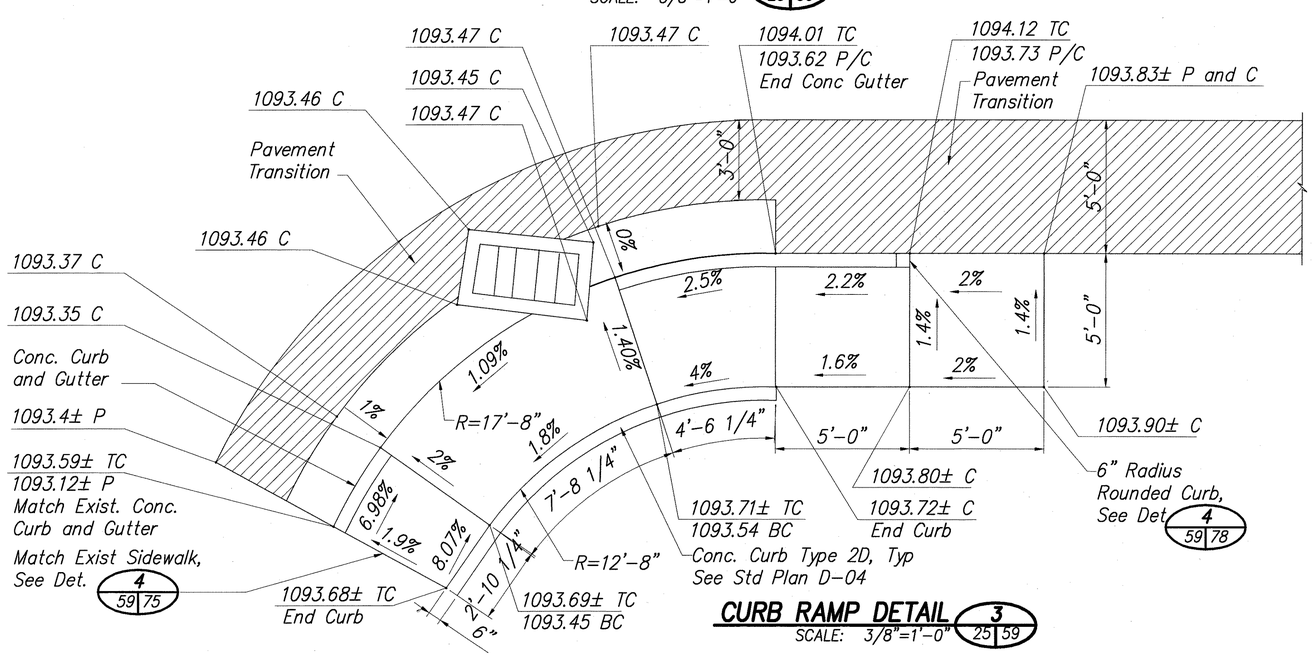

CURB RAMP DETAIL (3 / 25 59)

SCALE: 3/8"=1'-0"

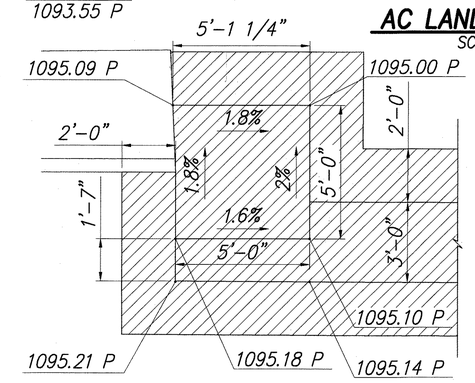

AC LANDING DETAIL (4 / 24 59)

SCALE: 3/8"=1'-0"

reduced plan
(half size)
0 1 2 3
3 inches on original plan

CEY H. MURAKAMI
LICENSED PROFESSIONAL ENGINEER
NO. 9763-C
HAWAII USA

THIS WORK WAS PREPARED BY ME OR UNDER MY SUPERVISION

SIGNATURE — 04/30/06 EXPIRATION DATE OF THE LICENSE

STATE OF HAWAII
DEPARTMENT OF TRANSPORTATION
HIGHWAYS DIVISION

HONOKAA – RAMP DETAILS-6

PEDESTRIAN ACCESSIBILITY ROUTE IMPROVEMENTS – HONOKAA, HAWI, AND KAPAAU
Federal Aid Project No. CMAQ-0100(62)

Scale: AS NOTED Date: SEPT. 2004

SHEET No. 59 OF 86 SHEETS

ORIGINAL PLAN	SURVEY PLOTTED BY	DL	DATE 9/2004
	DRAWN BY	DL	" 9/2004
	TRACED BY	DL	" 9/2004
NOTE BOOK	DESIGNED BY	CM	" 9/2004
	QUANTITIES BY	TC	" 9/2004
No.	CHECKED BY	RS	" 9/2004

I:\2000\2000_070.000 PROJECT POINT – PEDESTRIAN ACCESSIBILITY\G DRAWINGS\DETAILS\C-DT0006 HONOKAA RAMP DETAILS 59.DWG 05/15/02 19:29 MTM

FED. ROAD DIST. NO.	STATE	FED. AID PROJ. NO.	FISCAL YEAR	SHEET NO.	TOTAL SHEETS
HAWAII	HAW.	CMAQ-0100(62)	2004	60	86

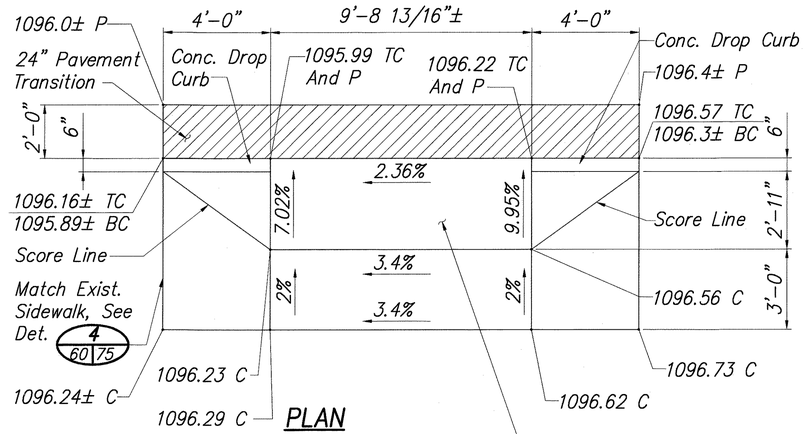

PLAN

DRIVEWAY DETAIL 1 26|60

SCALE: 3/8"=1'-0"

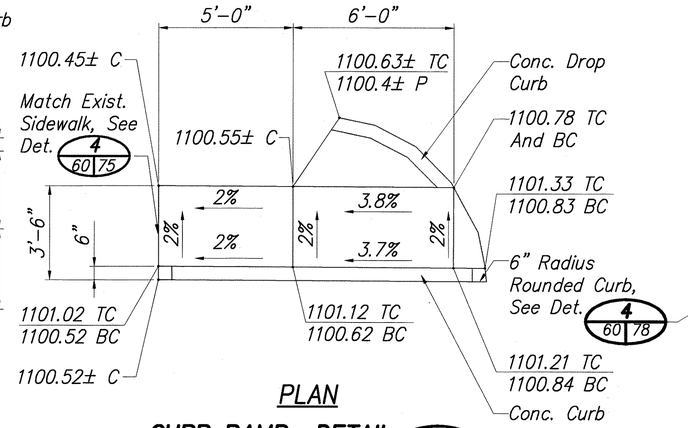

PLAN

CURB RAMP DETAIL 2 26|60

SCALE: 3/8"=1'-0"

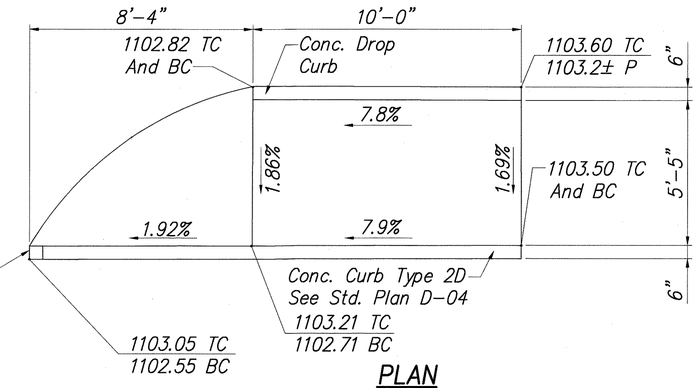

PLAN

CURB RAMP DETAIL 3 27|60

SCALE: 3/8"=1'-0"

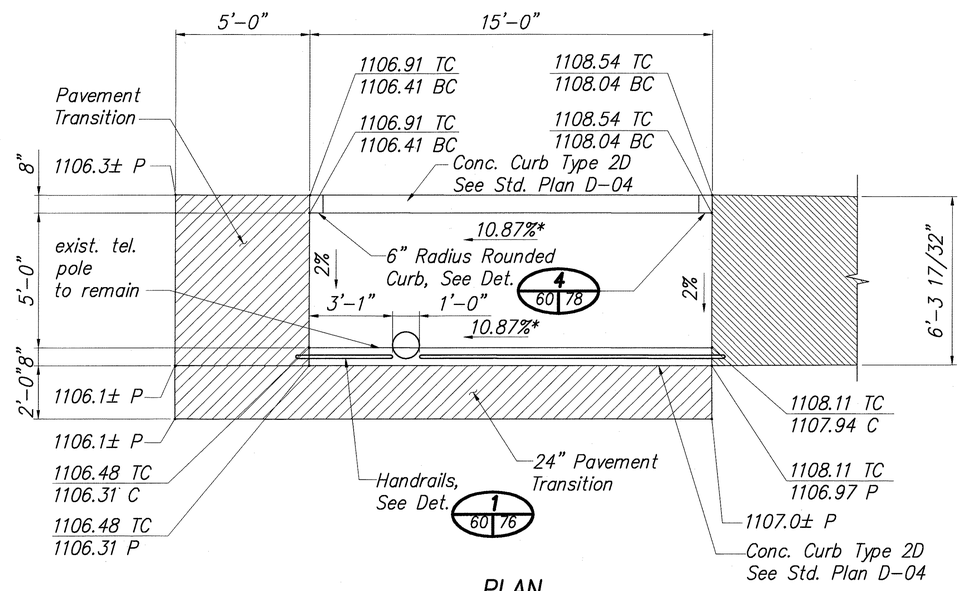

PLAN

* Technically Infeasible Slopes

TRANSITION RAMP DETAIL 4 27|60

SCALE: 3/8"=1'-0"

TECHNICALLY INFEASIBLE

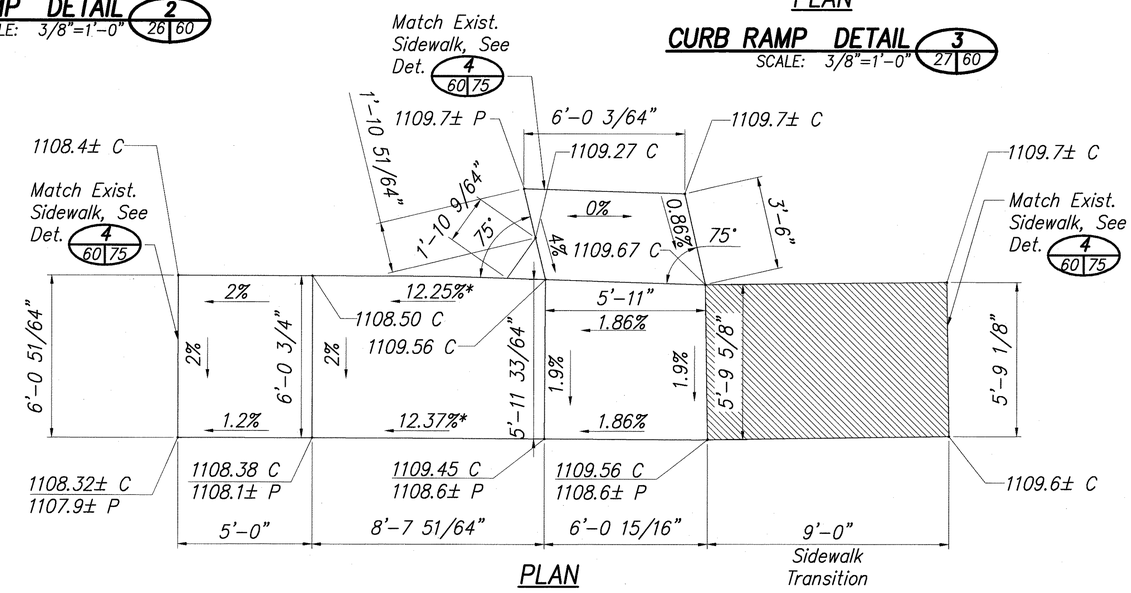

PLAN

* Technically Infeasible Slopes

TRANSITION RAMP DETAIL 5 27|60

SCALE: 3/8"=1'-0"

TECHNICALLY INFEASIBLE

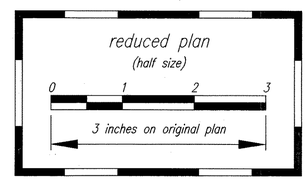

CEY H. MURAKAMI
LICENSED PROFESSIONAL ENGINEER
NO. 9763-C
HAWAII USA

THIS WORK WAS PREPARED BY ME OR UNDER MY SUPERVISION

SIGNATURE — EXPIRATION DATE OF THE LICENSE 04/30/06

STATE OF HAWAII
DEPARTMENT OF TRANSPORTATION
HIGHWAYS DIVISION

HONOKAA – RAMP DETAILS-7

PEDESTRIAN ACCESSIBILITY ROUTE IMPROVEMENTS – HONOKAA, HAWI, AND KAPAAU
Federal Aid Project No. CMAQ-0100(62)

Scale: AS NOTED Date: SEPT. 2004

SHEET No. 60 OF 86 SHEETS

ORIGINAL PLAN			
	SURVEY PLOTTED BY	DL	DATE 9/2004
	DRAWN BY	DL	" 9/2004
NOTE BOOK	TRACED BY	DL	" 9/2004
	DESIGNED BY	CM	" 9/2004
	QUANTITIES BY	TC	" 9/2004
No.	CHECKED BY	RS	" 9/2004

I:\2000\2000_070.000 PROJECT POINT – PEDESTRIAN ACCESSIBILITY\G DRAWINGS\DETAILS\C-DT0007 HONOKAA RAMP DETAILS 60.DWG 05/15/02 19:39 MTM

FED. ROAD DIST. NO.	STATE	FED. AID PROJ. NO.	FISCAL YEAR	SHEET NO.	TOTAL SHEETS
HAWAII	HAW.	CMAQ-0100(62)	2004	61	86

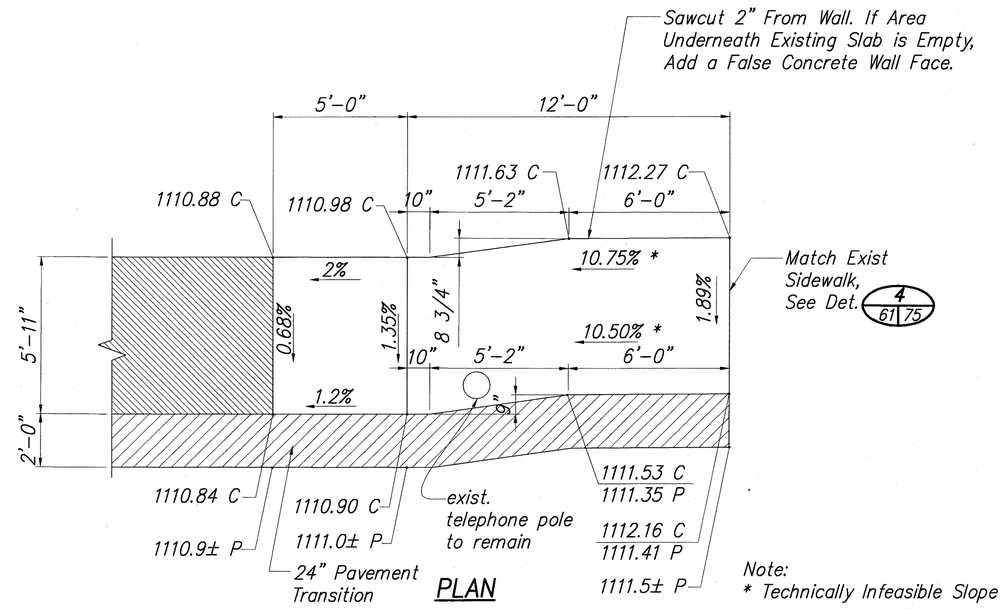

TRANSITION RAMP DETAIL 1 27 61 TECHNICALLY INFEASIBLE
SCALE: 3/8"=1'-0"

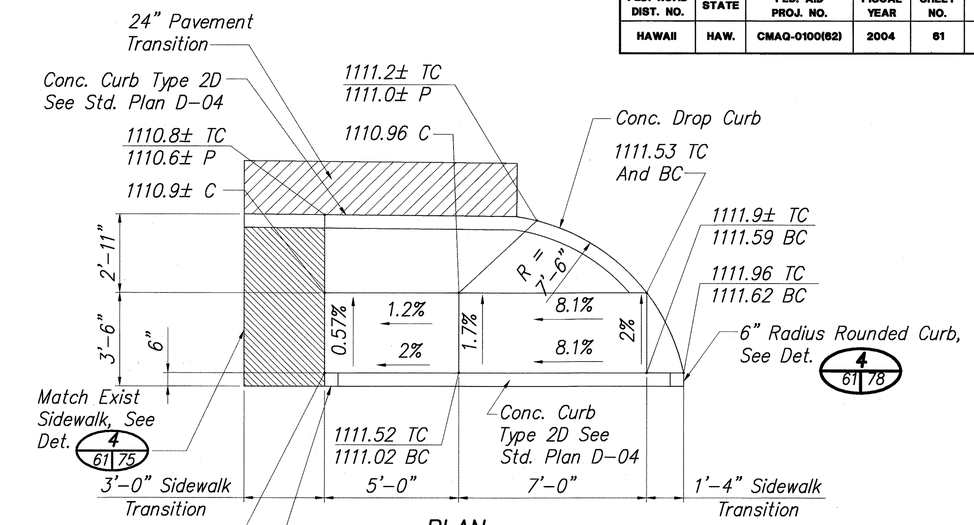

CURB RAMP DETAIL 2 27 61
SCALE: 3/8"=1'-0"

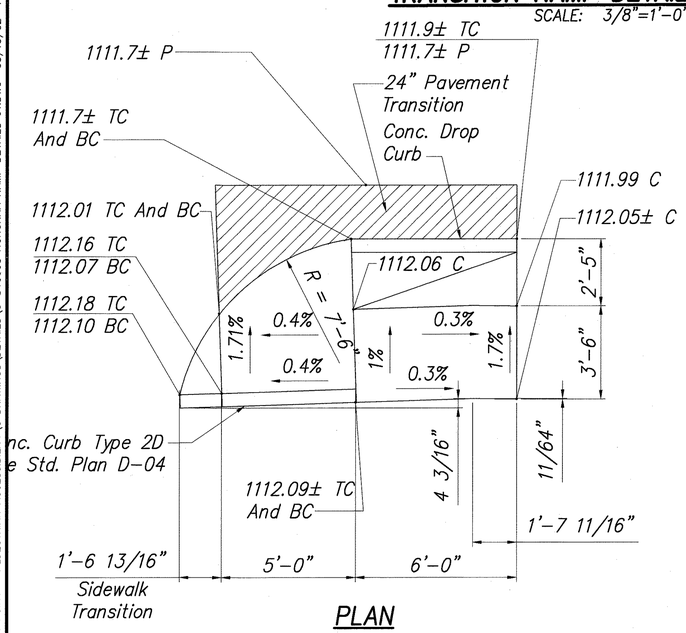

CURB RAMP DETAIL 3 27 61
SCALE: 3/8"=1'-0"

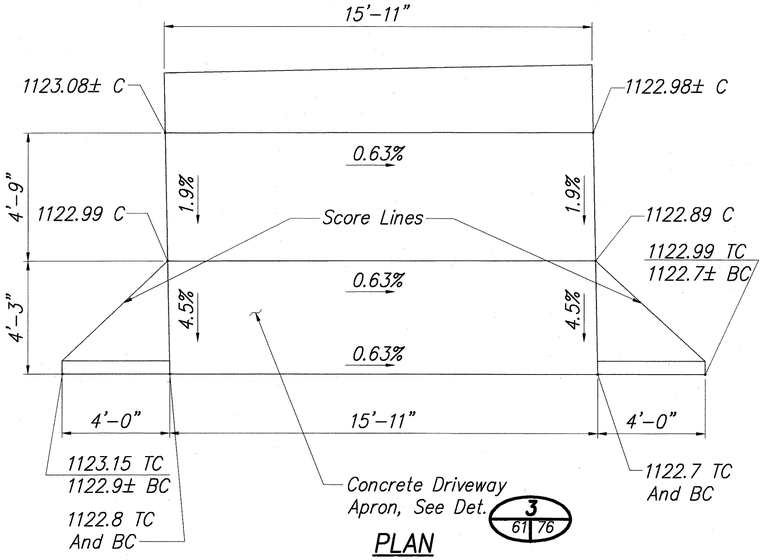

DRIVEWAY DETAIL 4 31 61
SCALE: 3/8"=1'-0"

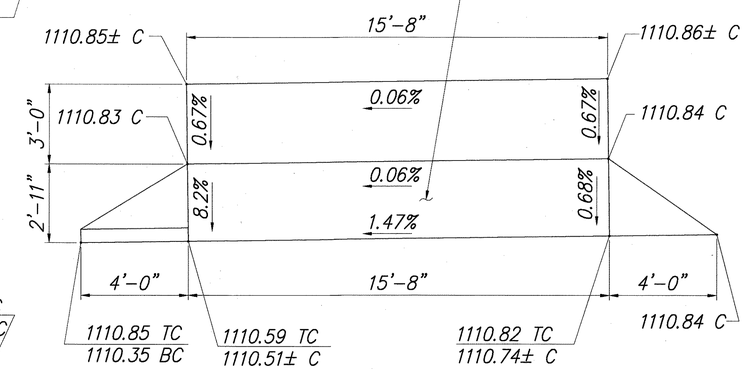

DRIVEWAY DETAIL 5 27 61
SCALE: 3/8"=1'-0"

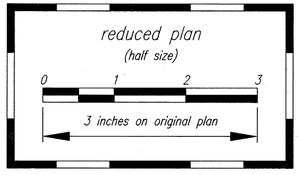

CEY H. MURAKAMI
LICENSED PROFESSIONAL ENGINEER
NO. 9763-C
HAWAII USA

THIS WORK WAS PREPARED BY ME OR UNDER MY SUPERVISION

SIGNATURE — EXPIRATION DATE OF THE LICENSE 04/30/06

STATE OF HAWAII
DEPARTMENT OF TRANSPORTATION
HIGHWAYS DIVISION

HONOKAA – RAMP DETAILS-8

PEDESTRIAN ACCESSIBILITY ROUTE IMPROVEMENTS – HONOKAA, HAWI, AND KAPAAU
Federal Aid Project No. CMAQ-0100(62)

Scale: AS NOTED Date: SEPT. 2004

SHEET No. 61 OF 86 SHEETS

ORIGINAL PLAN	SURVEY PLOTTED BY	DATE
	DRAWN BY DL	9/2004
	TRACED BY DL	9/2004
NOTE BOOK	DESIGNED BY CM	9/2004
	QUANTITIES BY TC	9/2004
No.	CHECKED BY BS	9/2004

I:\2000\2000_070.000 PROJECT POINT - PEDESTRIAN ACCESSIBILITY\G DRAWINGS\DETAILS\C-DT0008 HONOKAA RAMP DETAILS 61.DWG 05/15/02 19:42 MTM

FED. ROAD DIST. NO.	STATE	FED. AID PROJ. NO.	FISCAL YEAR	SHEET NO.	TOTAL SHEETS
HAWAII	HAW.	CMAQ-0100(62)	2004	62	86

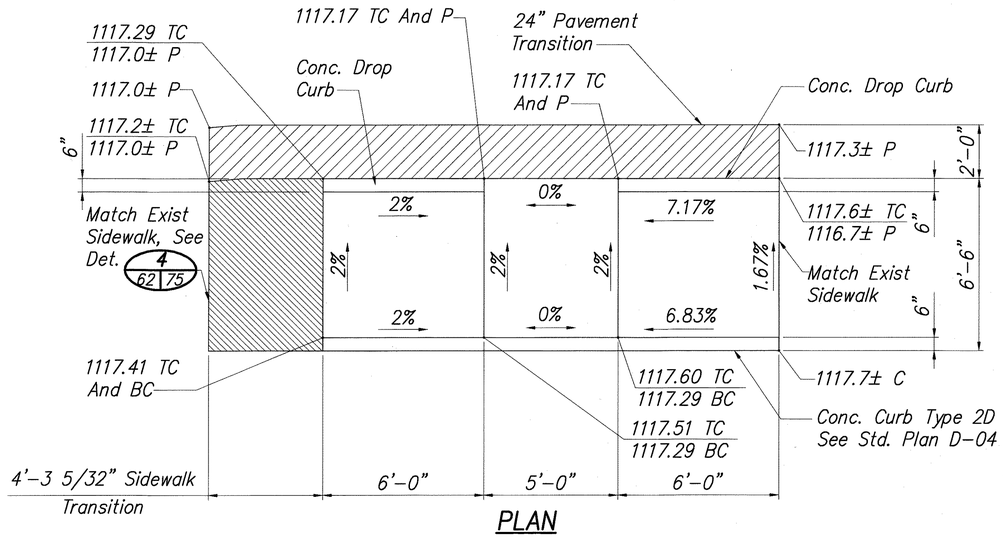

PLAN

CURB RAMP DETAIL 1 (29 | 62)

SCALE: 3/8"=1'-0"

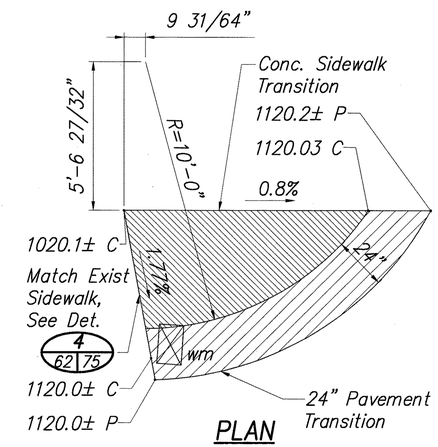

PLAN

CONC. TRANSITION DETAIL 2 (30 | 62)

SCALE: 3/8"=1'-0"

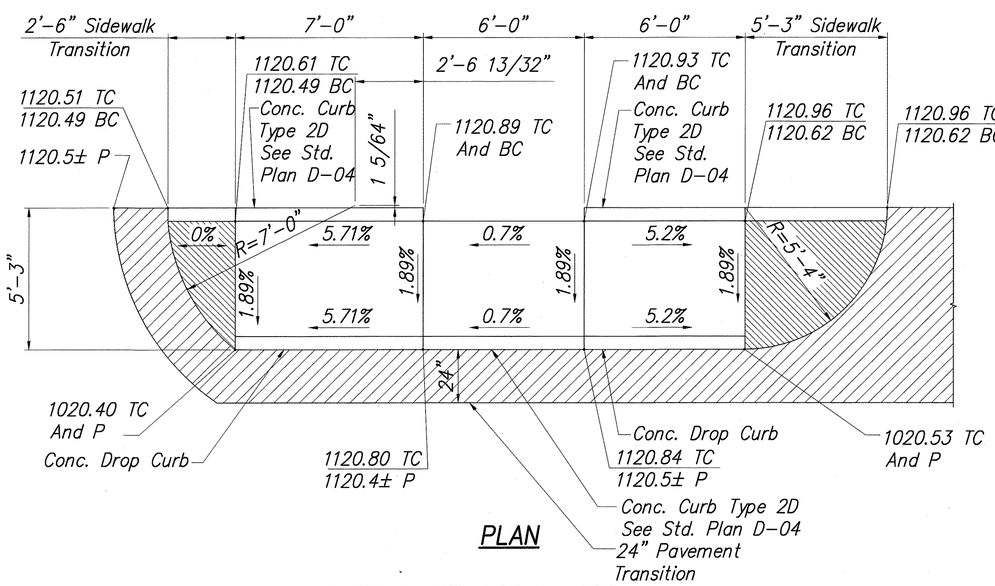

PLAN

CURB RAMP DETAIL 3 (30 | 62)

SCALE: 3/8"=1'-0"

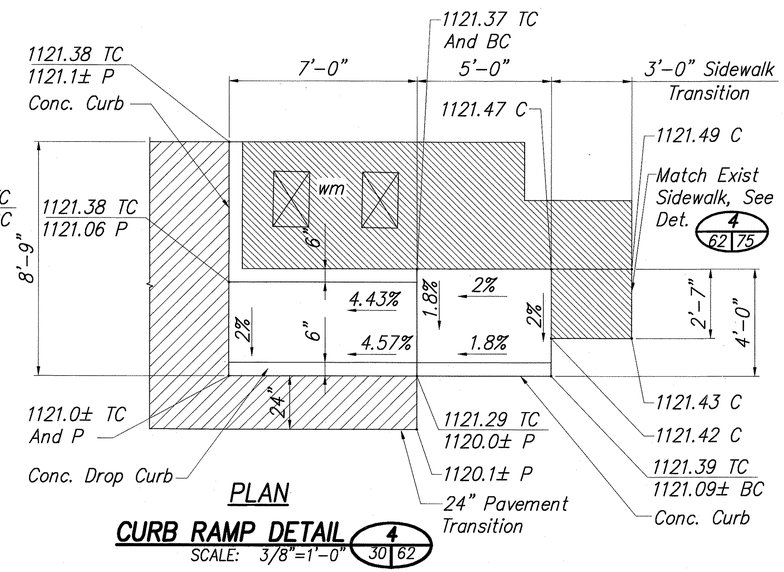

PLAN

CURB RAMP DETAIL 4 (30 | 62)

SCALE: 3/8"=1'-0"

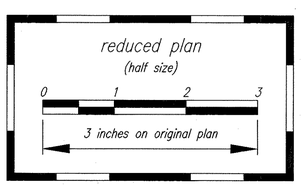

CEY H. MURAKAMI
LICENSED PROFESSIONAL ENGINEER
NO. 9763-C
HAWAII USA

THIS WORK WAS PREPARED BY ME OR UNDER MY SUPERVISION

SIGNATURE

04/30/06

EXPIRATION DATE OF THE LICENSE

STATE OF HAWAII
DEPARTMENT OF TRANSPORTATION
HIGHWAYS DIVISION

HONOKAA – RAMP DETAILS–9

PEDESTRIAN ACCESSIBILITY ROUTE IMPROVEMENTS – HONOKAA, HAWI, AND KAPAAU
Federal Aid Project No. CMAQ-0100(62)

Scale: AS NOTED Date: SEPT. 2004

SHEET No. 62 OF 86 SHEETS

ORIGINAL PLAN	SURVEY PLOTTED BY	DL	DATE
	DRAWN BY	DL	9/2004
	TRACED BY	DL	" 9/2004
NOTE BOOK	DESIGNED BY	CM	" 9/2004
	QUANTITIES BY	TC	" 9/2004
No.	CHECKED BY	RS	" 9/2004

I:\2000\2000_070.000 PROJECT POINT - PEDESTRIAN ACCESSIBILITY\G DRAWINGS\DETAILS\C-DT0009 HONOKAA RAMP DETAILS 62.DWG 05/15/02 19:44 MTM

FED. ROAD DIST. NO.	STATE	FED. AID PROJ. NO.	FISCAL YEAR	SHEET NO.	TOTAL SHEETS
HAWAII	HAW.	CMAQ-0100(62)	2004	63	86

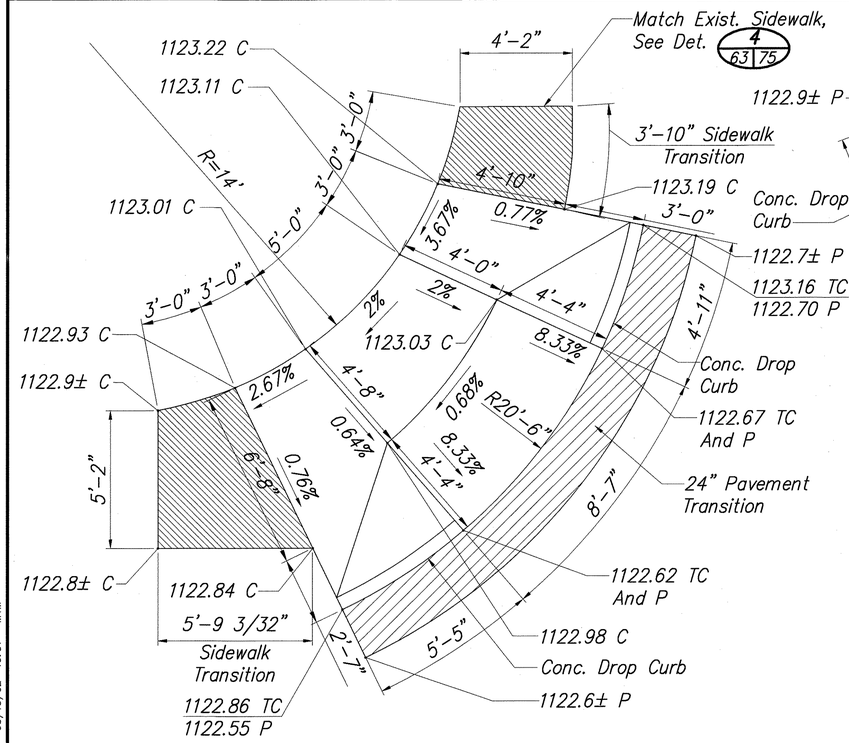

CURB RAMP DETAIL 1
SCALE: 3/8"=1'-0" 31|63

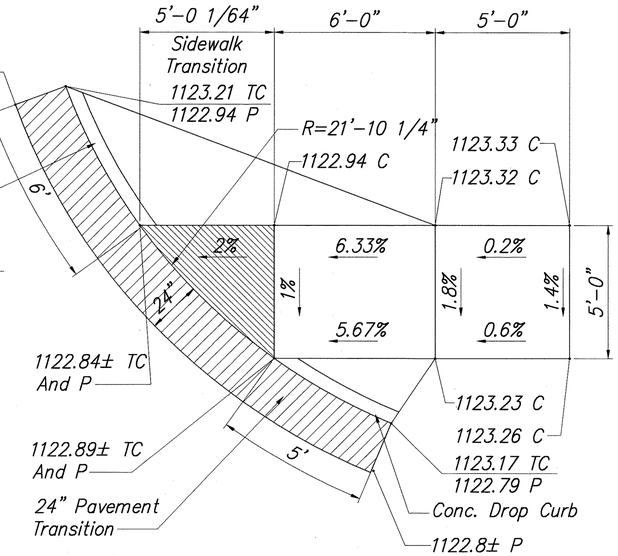

PLAN

CURB RAMP DETAIL 2
SCALE: 3/8"=1'-0" 31|63

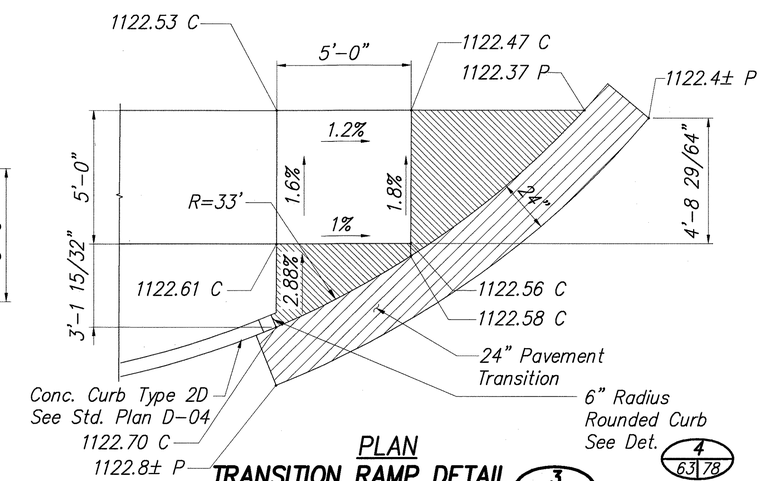

PLAN

TRANSITION RAMP DETAIL 3
SCALE: 3/8"=1'-0" 31|63

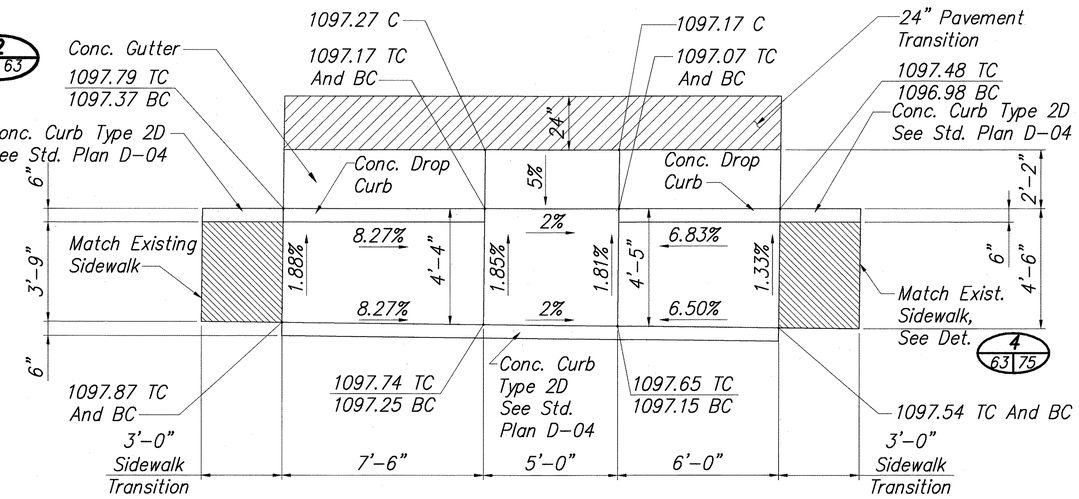

PLAN

CURB RAMP DETAIL 5
SCALE: 3/8"=1'-0" 21|63

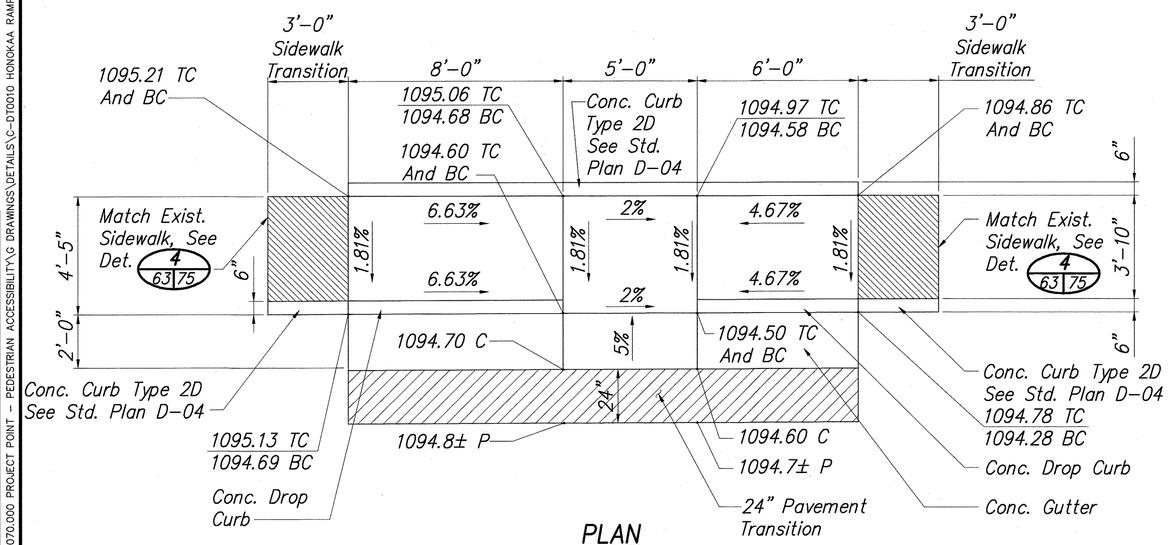

PLAN

CURB RAMP DETAIL 4
SCALE: 3/8"=1'-0" 21|63

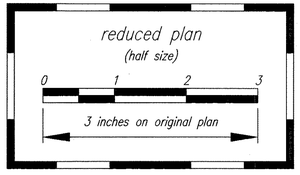

CEY H. MURAKAMI
LICENSED PROFESSIONAL ENGINEER
NO. 9763-C
HAWAII USA

THIS WORK WAS PREPARED BY ME OR UNDER MY SUPERVISION

SIGNATURE — 04/30/06 EXPIRATION DATE OF THE LICENSE

STATE OF HAWAII
DEPARTMENT OF TRANSPORTATION
HIGHWAYS DIVISION

HONOKAA – RAMP DETAILS–10

PEDESTRIAN ACCESSIBILITY ROUTE IMPROVEMENTS – HONOKAA, HAWI, AND KAPAAU
Federal Aid Project No. CMAQ-0100(62)

Scale: AS NOTED Date: SEPT. 2004

SHEET No. 63 OF 86 SHEETS

ORIGINAL PLAN	SURVEY PLOTTED BY	DATE
	DRAWN BY DL	" 9/2004
	TRACED BY DL	" 9/2004
NOTE BOOK	DESIGNED BY TM	" 9/2004
	QUANTITIES BY TC	" 9/2004
No.	CHECKED BY SS	" 9/2004

I:\2000\2000_070.000 PROJECT POINT - PEDESTRIAN ACCESSIBILITY\G DRAWINGS\DETAILS\C-DT0010 HONOKAA RAMP DETAILS 63.DWG 05/15/02 19:51 MTM