FED. ROAD DIST. NO.	STATE	PROJ. NO.	FISCAL YEAR	SHEET NO.	TOTAL SHEETS
HAWAI'I	HAW.	HWY-H-09-00	2000	7	15

LEGEND FOR AS-BUILT POSTINGS

~~	Squiggly line for as-built deletion
~~100.00~~	Double line for as-built deletion
Roadway	Text for as-built posting

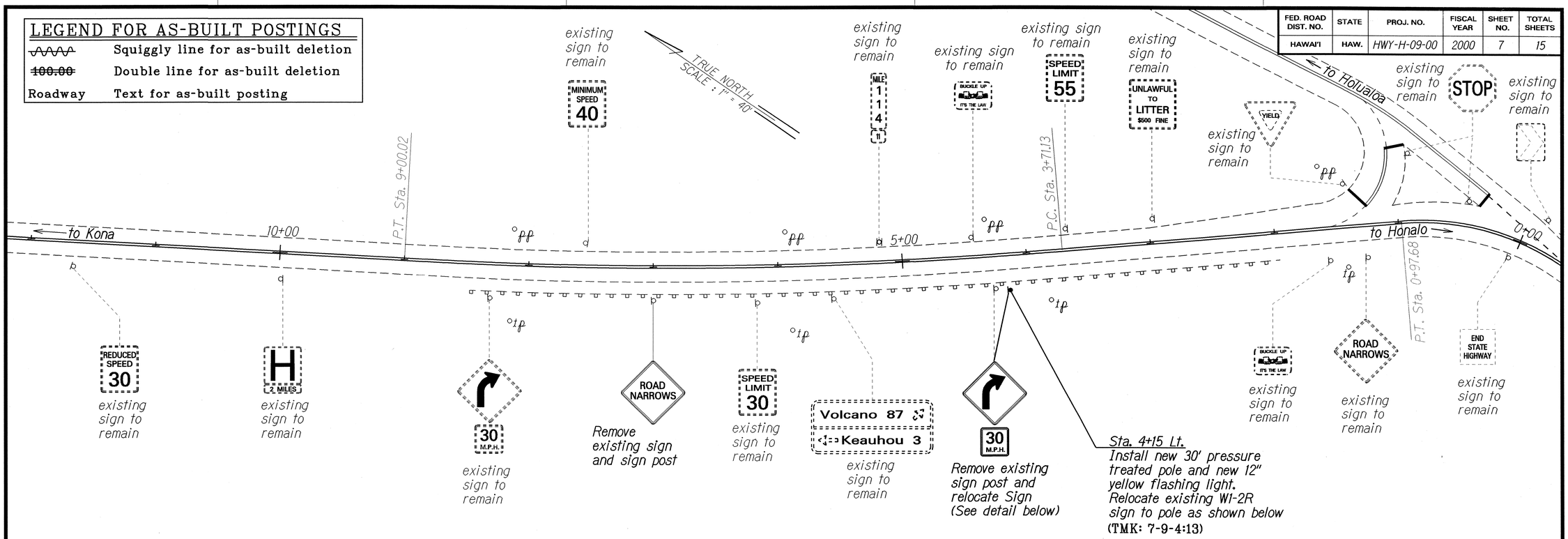

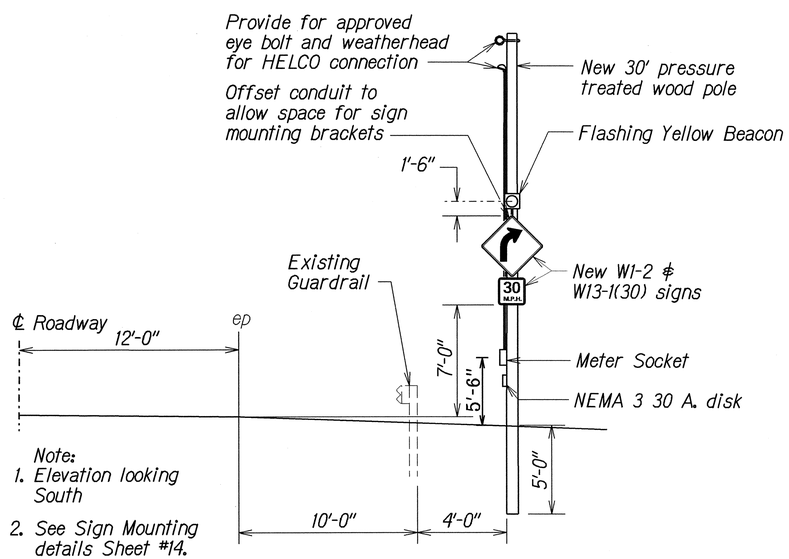

SECTION AT STA. 4+15± LT.
Scale: None

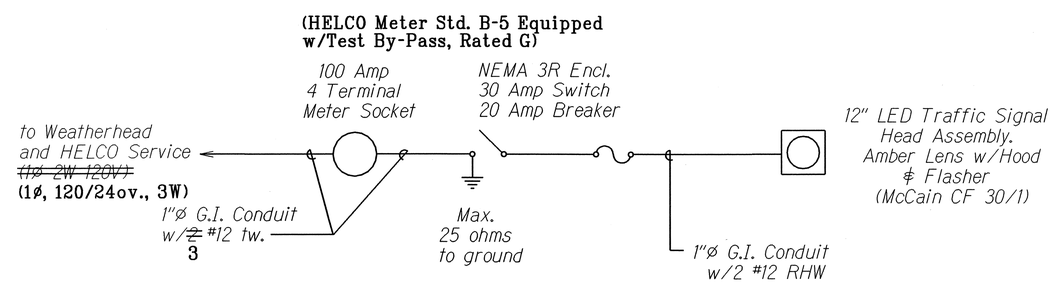

ONE LINE DIAGRAM
Scale: None

HELCO NOTES

1. HELCO shall not be responsible for any changes to the work being performed.
2. Electrical installation shall comply with:
   a. HELCO's Electrical Service Installation Manual
   b. Current National Electrical Code
   c. HELCO's Project Drawing No. 01-B-306 and specifications
3. Consult with HELCO's Engineering Department for any questions or clarifications regarding the electrical installation.

STATE OF HAWAI'I
DEPARTMENT OF TRANSPORTATION
HIGHWAYS DIVISION

PLAN AND DETAILS-SITE #3

FLASHING WARNING LIGHTS
VARIOUS HIGHWAY LOCATIONS
PROJ. NO. HWY-H-09-00

Scale: Noted — Date: April, 2000

SHEET No. 1 OF 1 SHEETS

ORIGINAL PLAN — SURVEY PLOTTED BY — DRAWN BY — TRACED BY — DESIGNED BY — QUANTITIES BY — CHECKED BY — DATE — NOTE BOOK — No.

AS-BUILT 7