FED. ROAD DIST. NO.	STATE	PROJ. NO.	FISCAL YEAR	SHEET NO.	TOTAL SHEETS
HAWAI'I	HAW.	HWY-H-09-00	2000	4	15

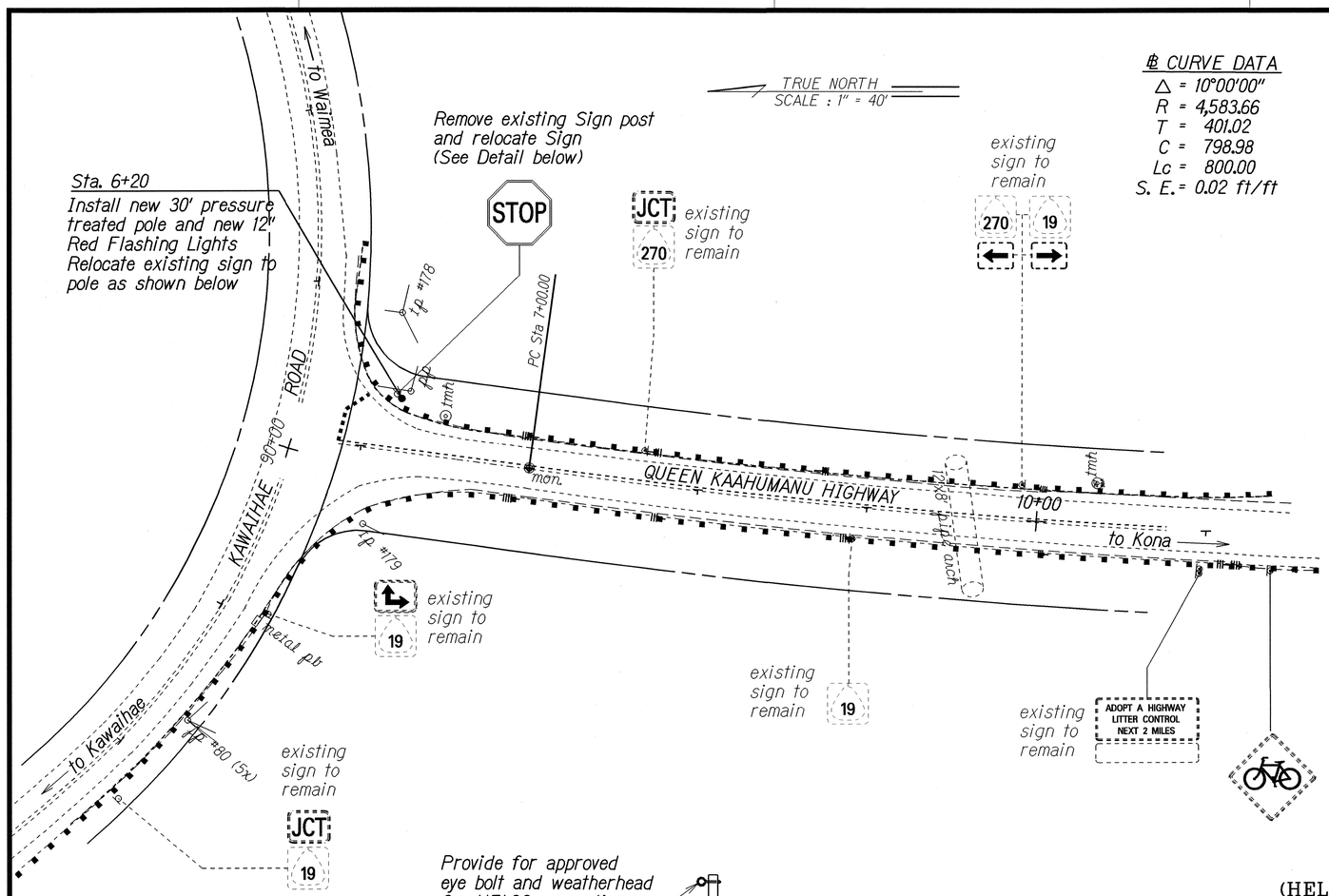

℄ CURVE DATA

Δ = 10°00'00"
R = 4,583.66
T = 401.02
C = 798.98
Lc = 800.00
S. E. = 0.02 ft/ft

HELCO NOTES

1. HELCO shall not be responsible for any changes to the work being performed.
2. Electrical installation shall comply with:
   a. HELCO's Electrical Service Installation Manual
   b. Current National Electrical Code
   c. HELCO's Project Drawing No. 01-B-306 and specifications
3. Consult with HELCO's Engineering Department for any questions or clarifications regarding the electrical installation.

Note:
Contractor to check with HELCO prior to placing pole.

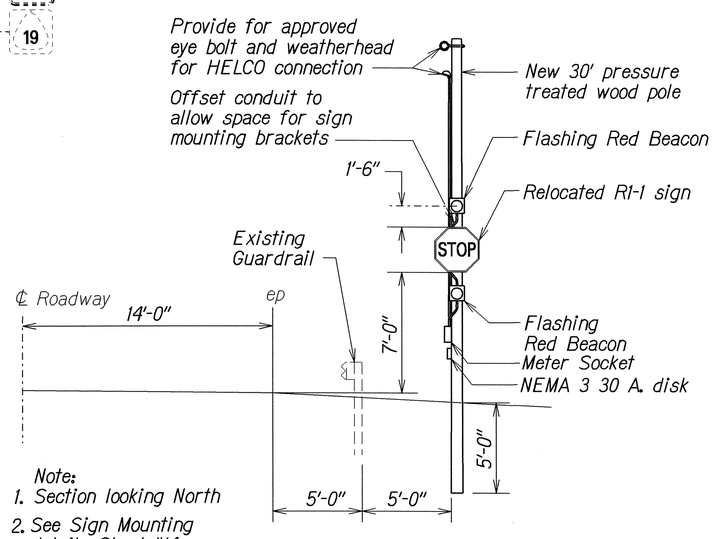

Note:
1. Section looking North
2. See Sign Mounting details Sheet #14.

SECTION AT STA. 6+20± LT.

Scale: None

(HELCO Meter Std. B-5 Equipped With Test By-Pass, Rated G)

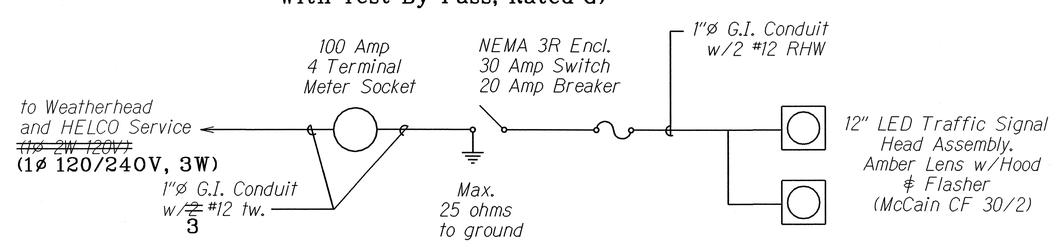

ONE LINE DIAGRAM

Scale: None

LEGEND FOR AS-BUILT POSTINGS	
~~	Squiggly line for as-built deletion
~~100.00~~	Double line for as-built deletion
Roadway	Text for as-built posting

STATE OF HAWAI'I
DEPARTMENT OF TRANSPORTATION
HIGHWAYS DIVISION

PLAN AND DETAILS-SITE #1

FLASHING WARNING LIGHTS
VARIOUS HIGHWAY LOCATIONS
PROJ. NO. HWY-H-09-00

Scale: Noted — Date: April, 2000

SHEET No. 1 OF 1 SHEETS

ORIGINAL PLAN	SURVEY PLOTTED BY	DATE
	DRAWN BY X	
	TRACED BY	
NOTE BOOK bhmsgp	DESIGNED BY X	
No. sfgh	QUANTITIES BY	
	CHECKED BY	

AS-BUILT 4