FED. ROAD DIST. NO.	STATE	FED. AID PROJ. NO.	FISCAL YEAR	SHEET NO.	TOTAL SHEETS
HAWAII	HAW.	F-011-2(17)	1986	20	142

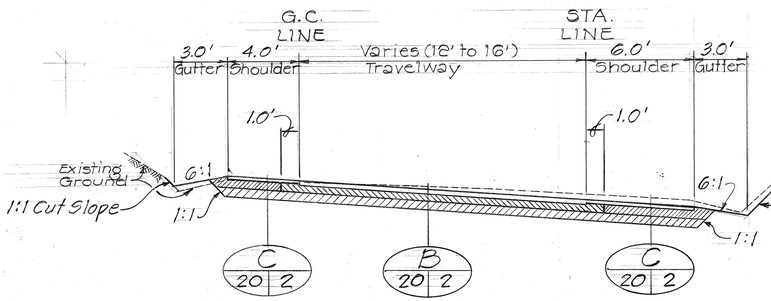

ON-RAMP TYPICAL SECTION

Scale: 1/4" = 1'-0"

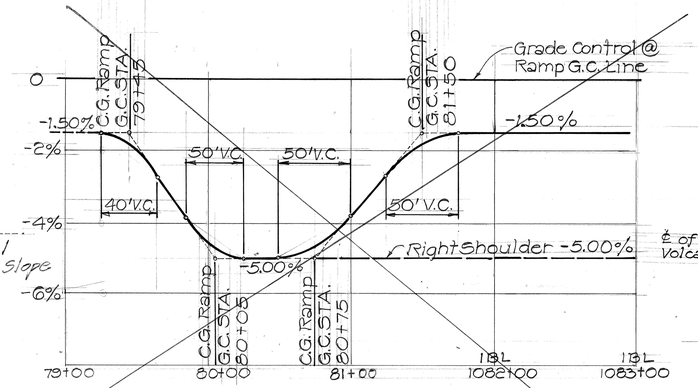

ON-RAMP SUPERELEVATION DIAGRAM

Scale: Horiz.: 1" = 50'
Vert.: 1" = 2%

NOTE: See Sheet No. 20 S-1 For Revised On-Ramp Plan, Profile and Superelevation.

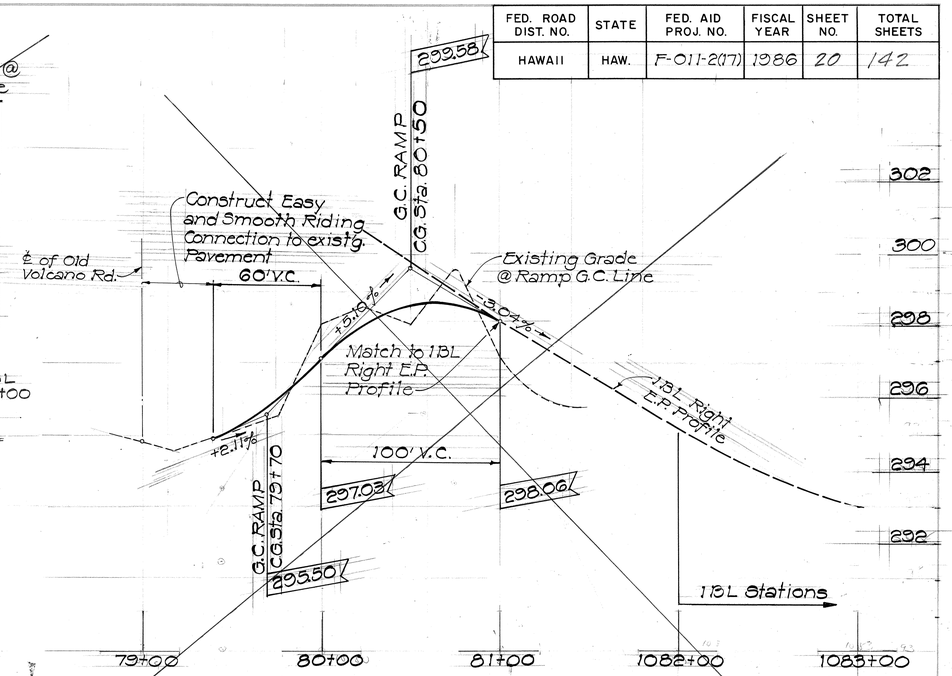

ON-RAMP PROFILE ~ 1BL STA. 1080+50± RT.

Scale: Horiz.: 1" = 40'
Vert.: 1" = 2'

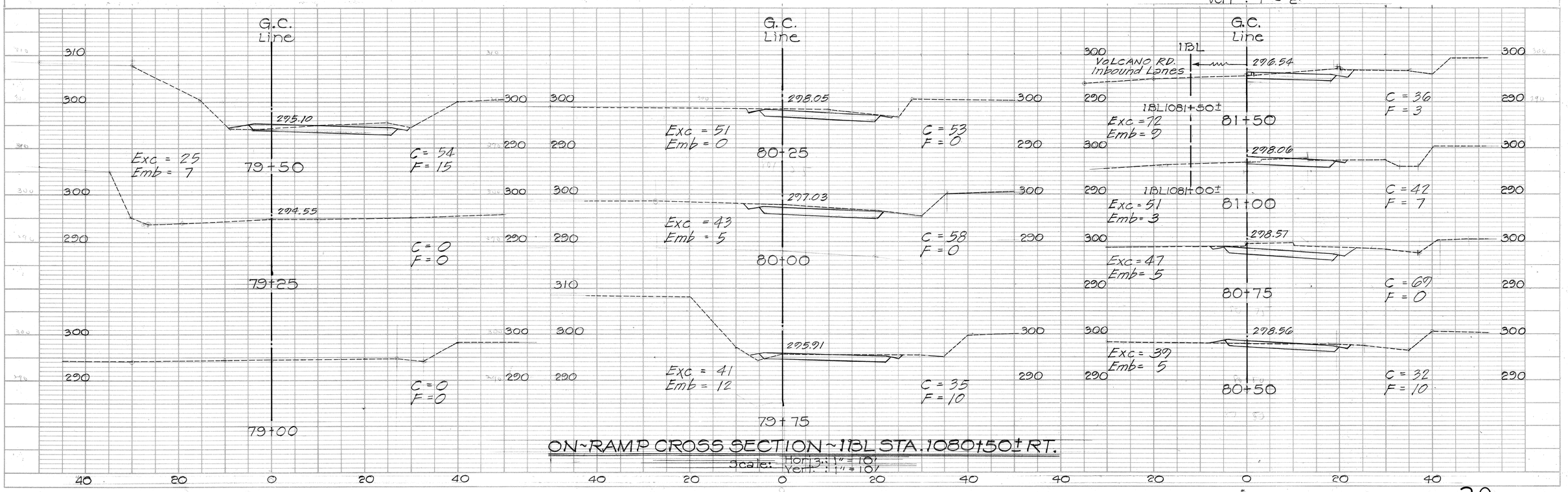

ON-RAMP CROSS SECTION ~ 1BL STA. 1080+50± RT.

Scale: Horiz.: 1" = 10'
Vert.: 1" = 10'

PLATE 1—PLAN PROFILE B. P. R. STANDARD
THE FREDERICK POST CO., CHICAGO

PLAN: SURVEYED / PLOTTED / ALIGNMENT CHECKED / RT. OF WAY CHECKED / NOTE BOOK NO. / BY / DATE

PROFILE: SURVEYED / PLOTTED / GRADES CHECKED / BY / DATE / STRUCTURE NOTATNS CH'KD. / NOTE BOOK NO. / BY / DATE

FED. ROAD DIST. NO.	STATE	FED. AID PROJ. NO.	FISCAL YEAR	SHEET NO.	TOTAL SHEETS
HAWAII	HAW.	F-011-2 (17) RSG-0130(22)		20S-1	

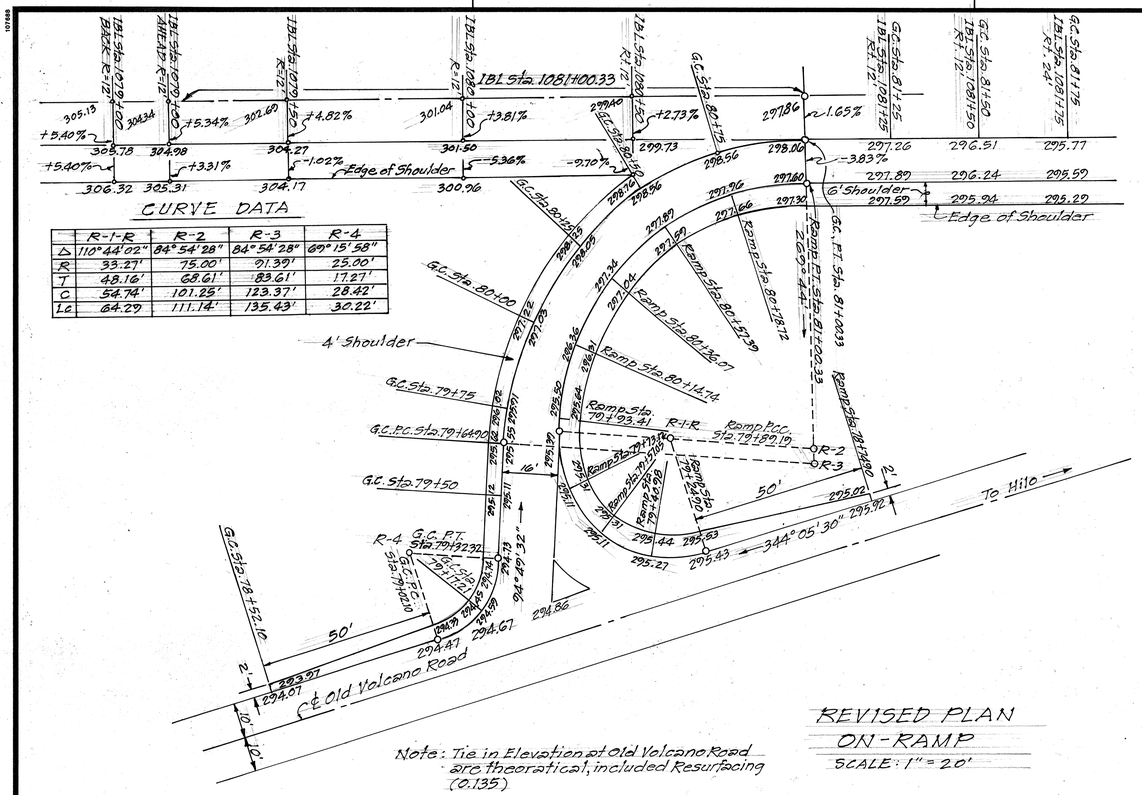

CURVE DATA

	R-1-R	R-2	R-3	R-4
Δ	110°44'02"	84°54'28"	84°54'28"	69°15'58"
R	33.27'	75.00'	91.39'	25.00'
T	48.16'	68.61'	83.61'	17.27'
C	54.74'	101.85'	123.37'	28.42'
Lc	64.29	111.14'	135.43'	30.22'

Note: Tie in Elevation at Old Volcano Road are theoretical, included Resurfacing (0.135)

REVISED PLAN
ON-RAMP
SCALE: 1" = 20'

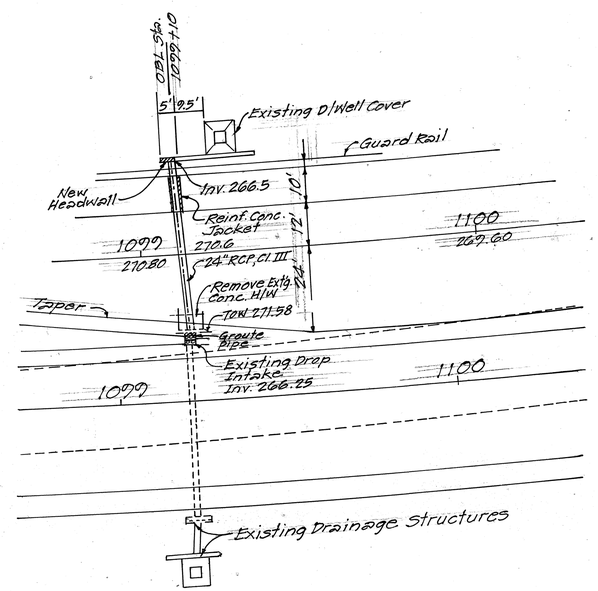

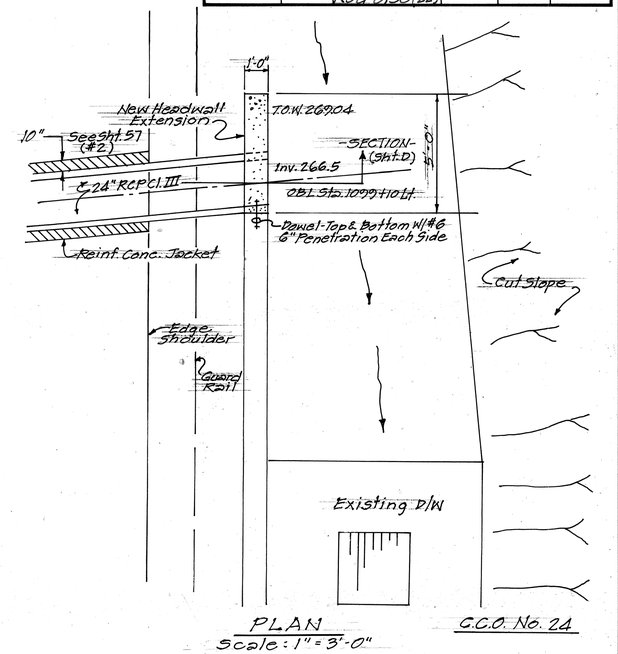

PLAN
Scale: 1" = 3'-0"
C.C.O. No. 24

OVERFLOW CULVERT
OBL STA. 1099+10± LEFT

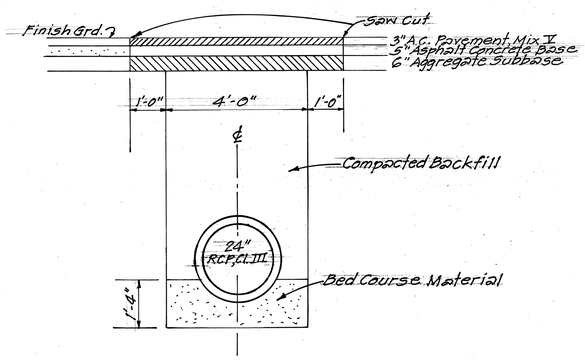

SECTION-RECONSTRUCTED
OBL PAVEMENT
SCALE: 1" = 2'-0"

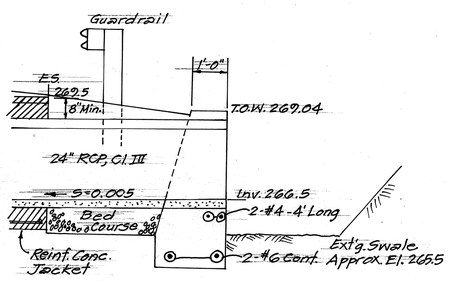

SECTION
Scale: 1" = 2'-0"

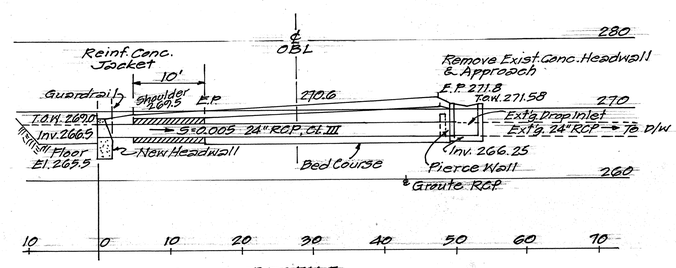

PROFILE
Scale: 1" = 10'-0"

NOTE:
This Tracing/Detail Prepared During "As-Built" Posting.

ORIGINAL PLAN	SURVEY PLOTTED BY	DATE
	DRAWN BY	
NOTE BOOK	TRACED BY	
	DESIGNED BY	
	QUANTITIES BY	
No.	CHECKED BY	

STATE OF HAWAII
DEPARTMENT OF TRANSPORTATION
HIGHWAYS DIVISION

VOLCANO ROAD
KEAAU AGRICUTUAL SUBDIVISION
TO SLAUGHTER HOUSE ROAD
FEDERAL AID PROJ. NO. F-011-2(17)

Scale: As Shown

SHEET No. OF SHEETS

20 S-1

FED. ROAD DIST. NO.	STATE	FED. AID PROJ. NO.	FISCAL YEAR	SHEET NO.	TOTAL SHEETS
HAWAII	HAW.	F-011-2(17)	1986	21	142

Estimated Quantities for Unpaved Haul Road

Roadway Exc. = 360 c.y.
Agg. Subbase = 257 c.y.

Estimated Quantities for Paved Portion Haul Road Sta. 0+13 to Sta. 0+84

A.C. Mix V = 37 tons
6" Agg. Base = 44 c.y.
6" Agg. Subbase = 44 c.y.

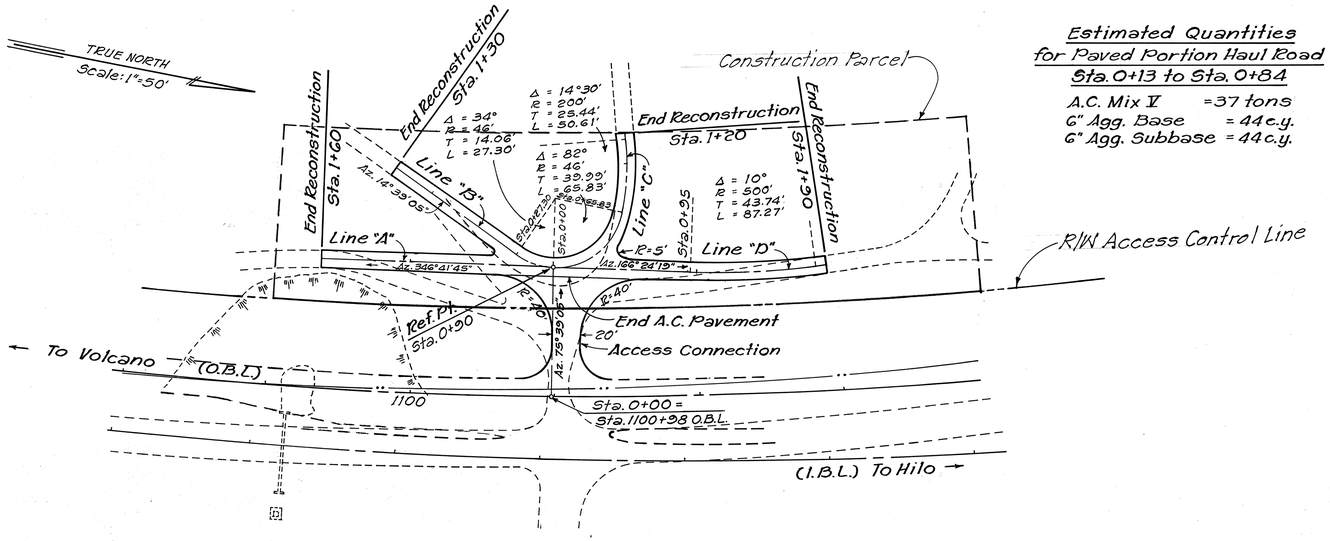

PLAN ~ CANE HAUL ROADS

Scale: 1" = 50'

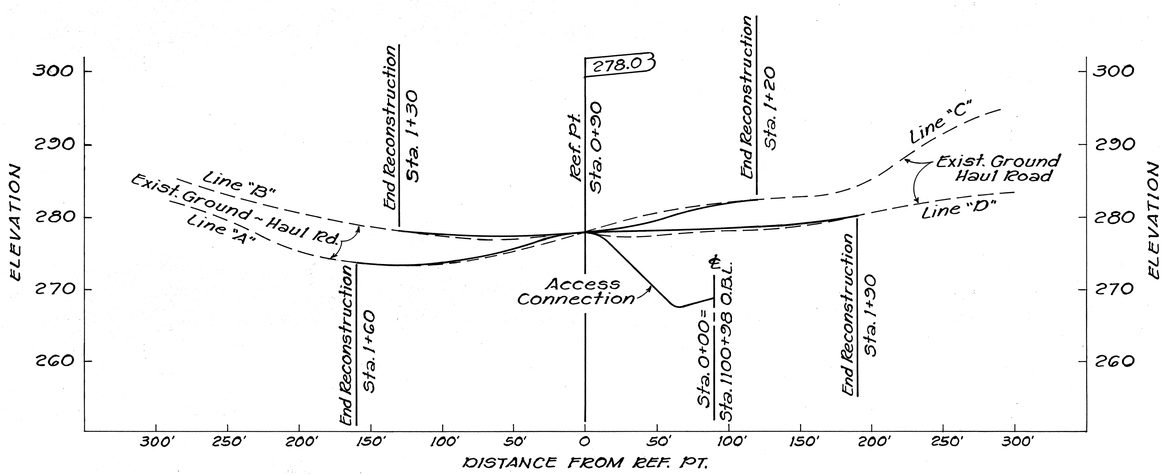

PROFILE ~ CANE HAUL ROADS

Scale: Horz.: 1" = 50'
Vert.: 1" = 10'

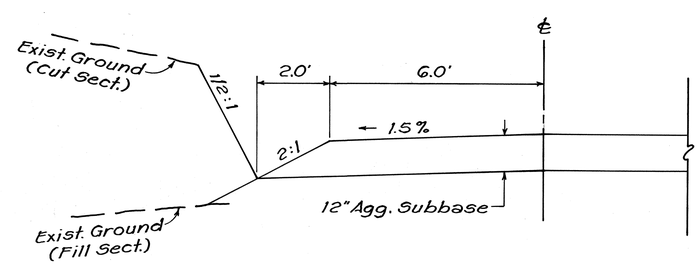

TYPICAL HALF SECTION CANE HAUL ROAD

Scale: 1" = 2.0'

ORIGINAL PLAN	SURVEY PLOTTED BY	DATE
	DRAWN BY	"
NOTE BOOK	TRACED BY	"
	DESIGNED BY	"
	QUANTITIES BY	"
No.	CHECKED BY	"

STATE OF HAWAII
DEPARTMENT OF TRANSPORTATION
HIGHWAYS DIVISION

CANE HAUL ROADS DETAIL

VOLCANO ROAD
KEAAU AGRICUTURAL SUBDIVISION TO SLAUGHTER HOUSE ROAD
FEDERAL AID PROJ. NO. F-011-2(17)

Scale: As Noted Date:

SHEET No. 21 OF SHEETS

FED. ROAD DIST. NO	STATE	FED. AID PROJ. NO.	FISCAL YEAR	SHEET NO.	TOTAL SHEETS
HAWAII	HAW.	F-011-2(17)	1986	22	142

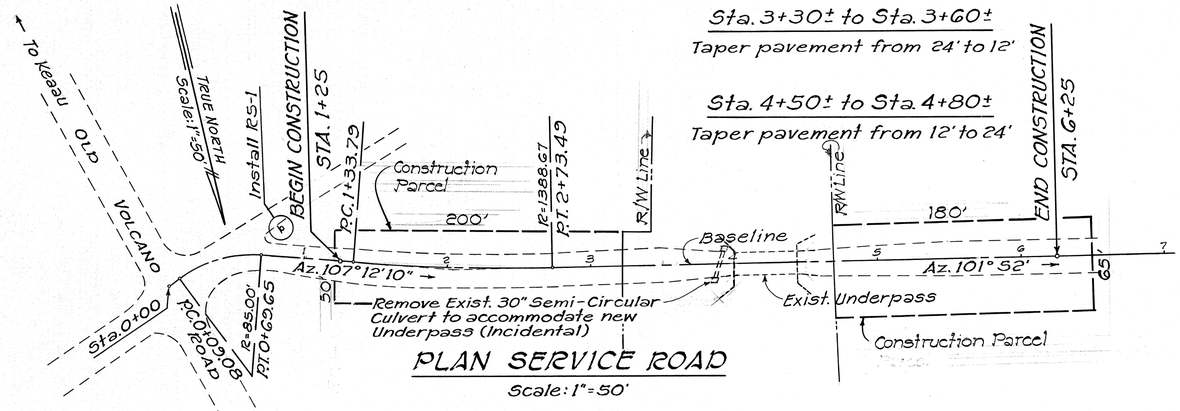

PLAN SERVICE ROAD

Scale: 1"=50'

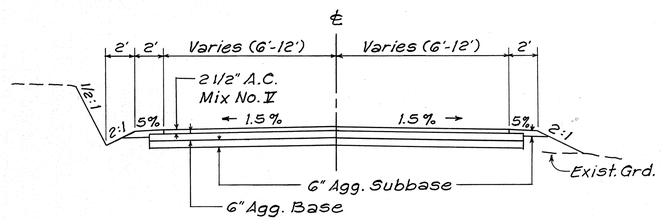

TYPICAL SECTION ~ SERVICE ROAD

Not To Scale

SUPERSEDED
SEE SHEETS C.O.22A & C.O.22B

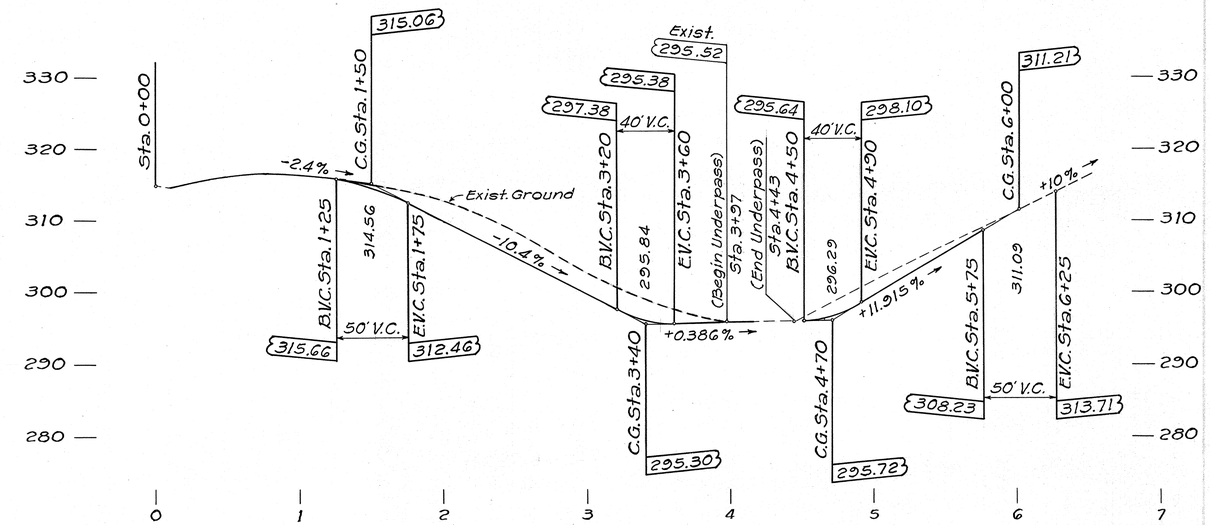

PROFILE SERVICE ROAD

Scale: Horz. 1"=50'
Vert. 1"=10'

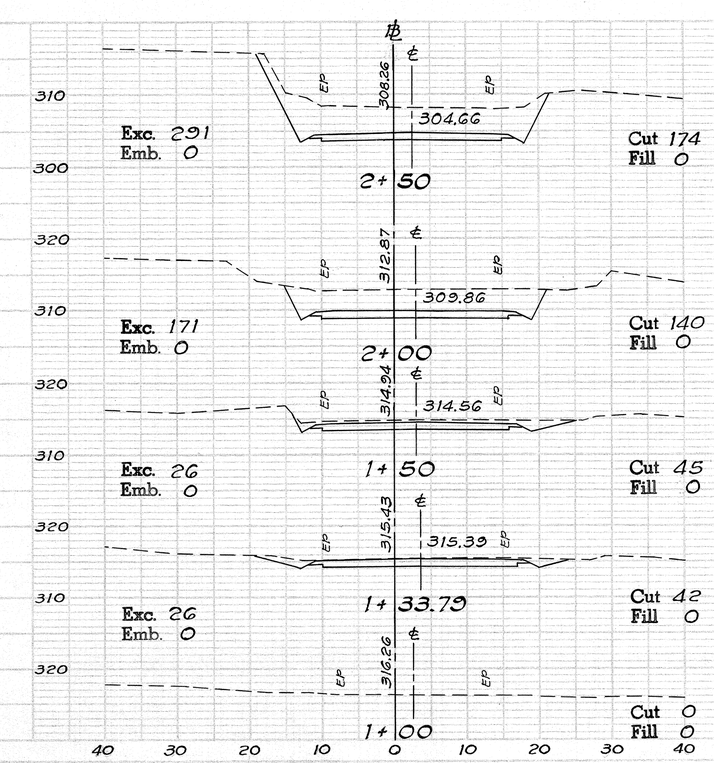

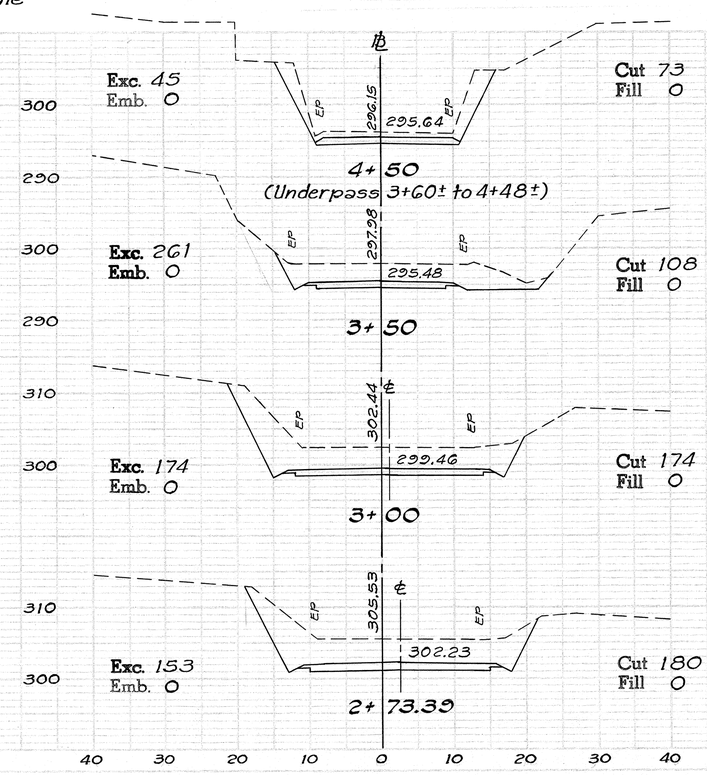

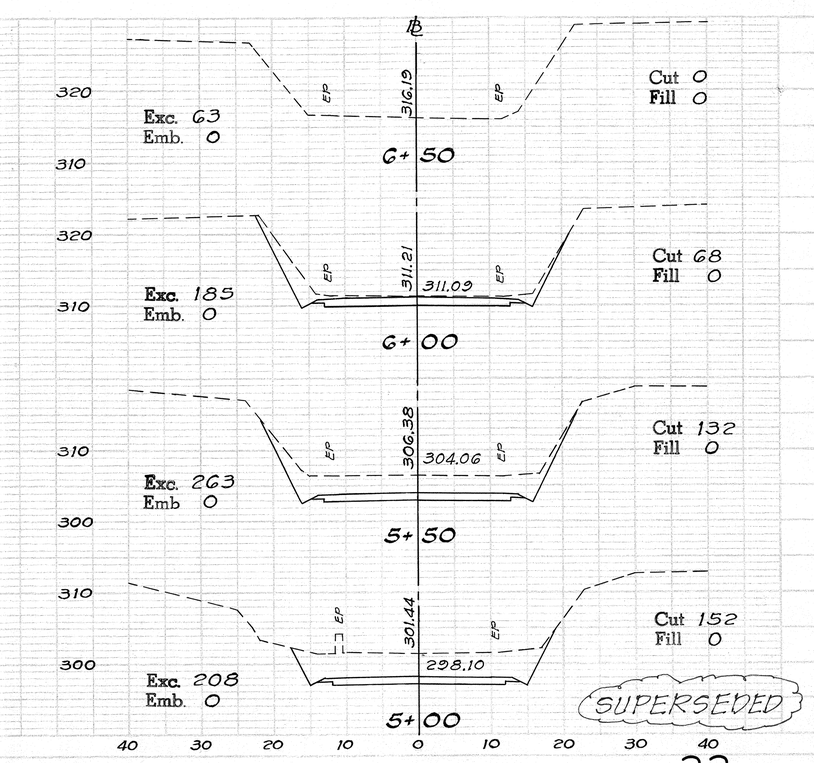

SUPERSEDED

FED. ROAD DIST. NO	STATE	FED. AID PROJ. NO.	FISCAL YEAR	SHEET NO.	TOTAL SHEETS
HAWAII	HAW.	F-011-2(17)			

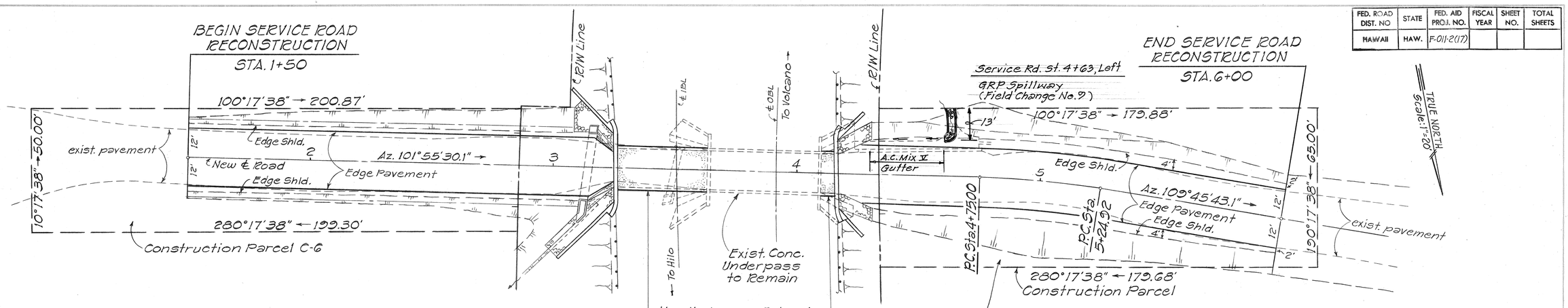

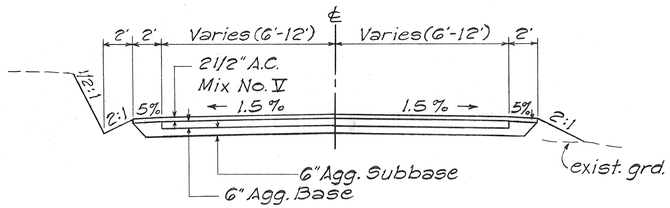

TYPICAL SECTION - SERVICE ROAD
STA. 1+50 TO STA. 3+24.75
Not To Scale

ESTIMATED QUANTITIES

A.C. Mix V	166	Tons
Aggregate Base	158	C.Y.
Aggregate Subbase	223	C.Y.
Roadway Exc.	1,472	C.Y.

CURVE DATA

Δ = 7°50'13"
R = 364.38'
T = 25.00'
C = 49.88'
L = 49.92'

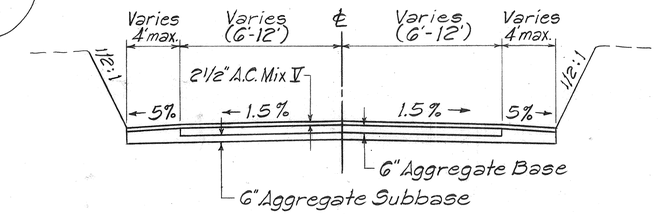

TYPICAL SECTION - SERVICE ROAD
STA. 4+16 TO STA. 6+00
Not To Scale

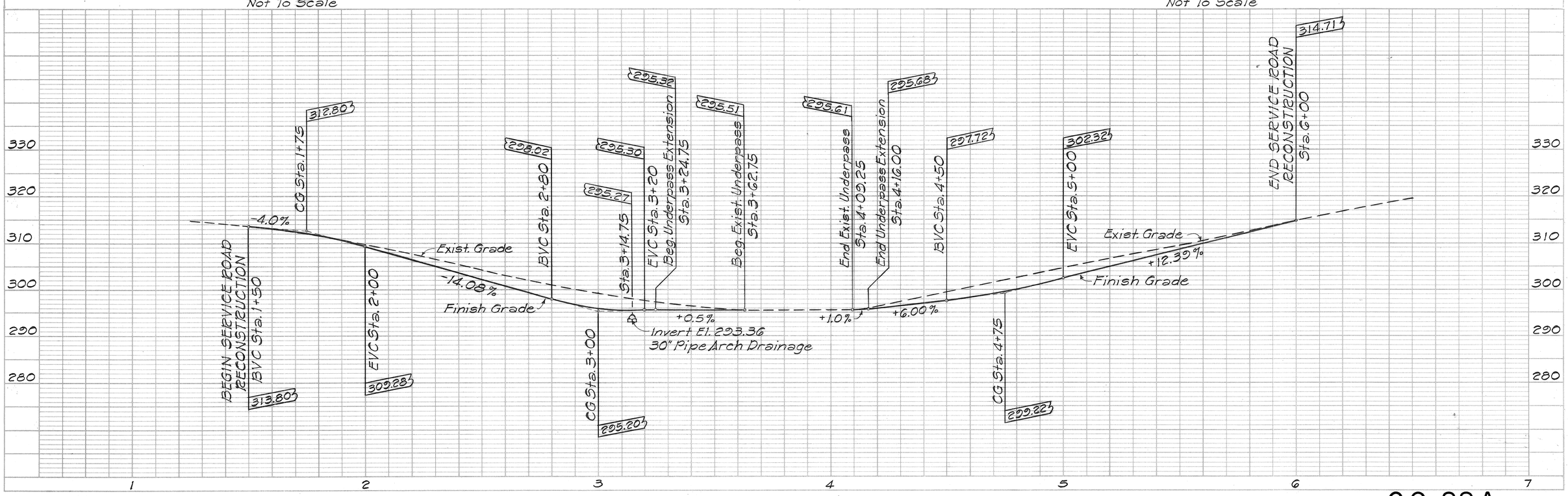

PLAN — SURVEYED / PLOTTED / ALIGNMENT CHECKED / R.O.W. CHECKED / NOTE BOOK / NO. / BY / DATE

PROFILE — SURVEYED / PLOTTED / GRADES CHECKED / B.M.'S NOTED / STRUCTURE NOTAT'NS CH'KD. / NOTE BOOK / NO. / BY / DATE

PLATE 1—PLAN PROFILE B. P. R. STANDARD
THE FREDERICK POST CO., CHICAGO

C.O. 22A

FED. ROAD DIST. NO	STATE	FED. AID PROJ. NO.	FISCAL YEAR	SHEET NO.	TOTAL SHEETS
HAWAII	HAW.	F-011-2(17)			

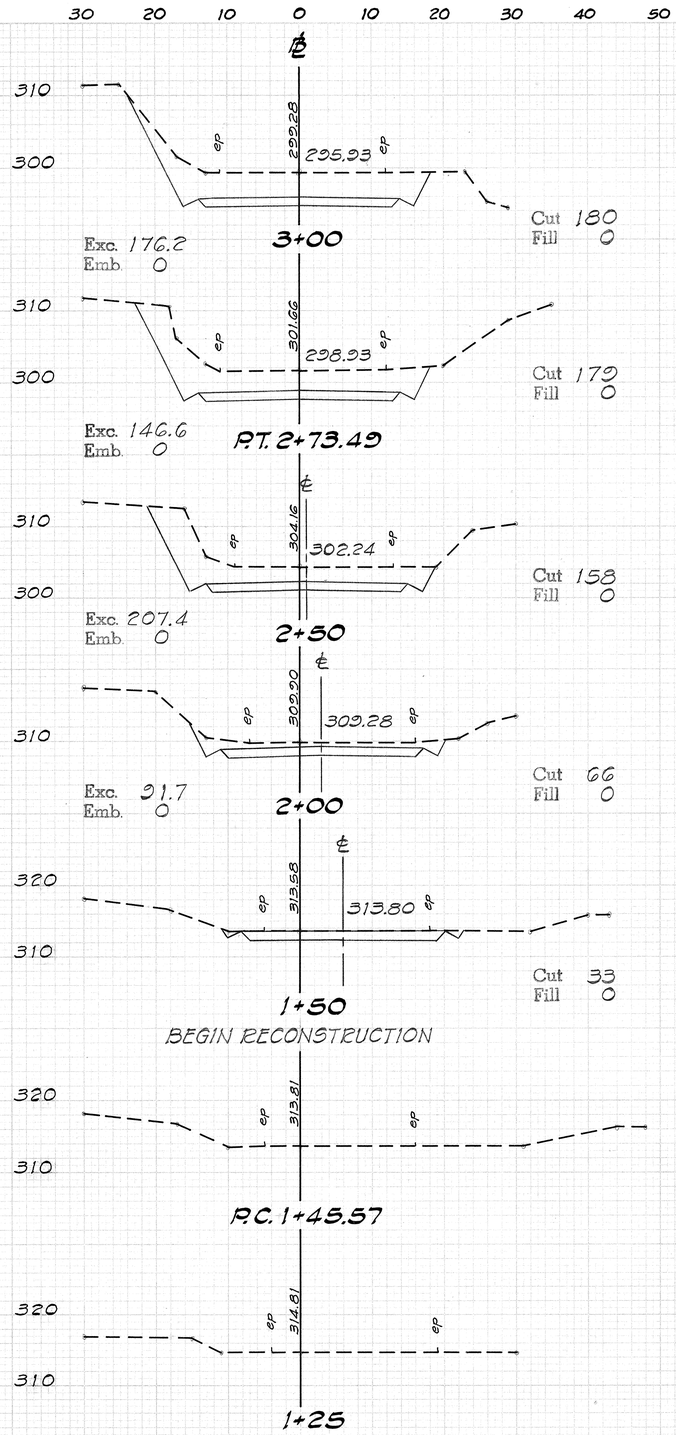

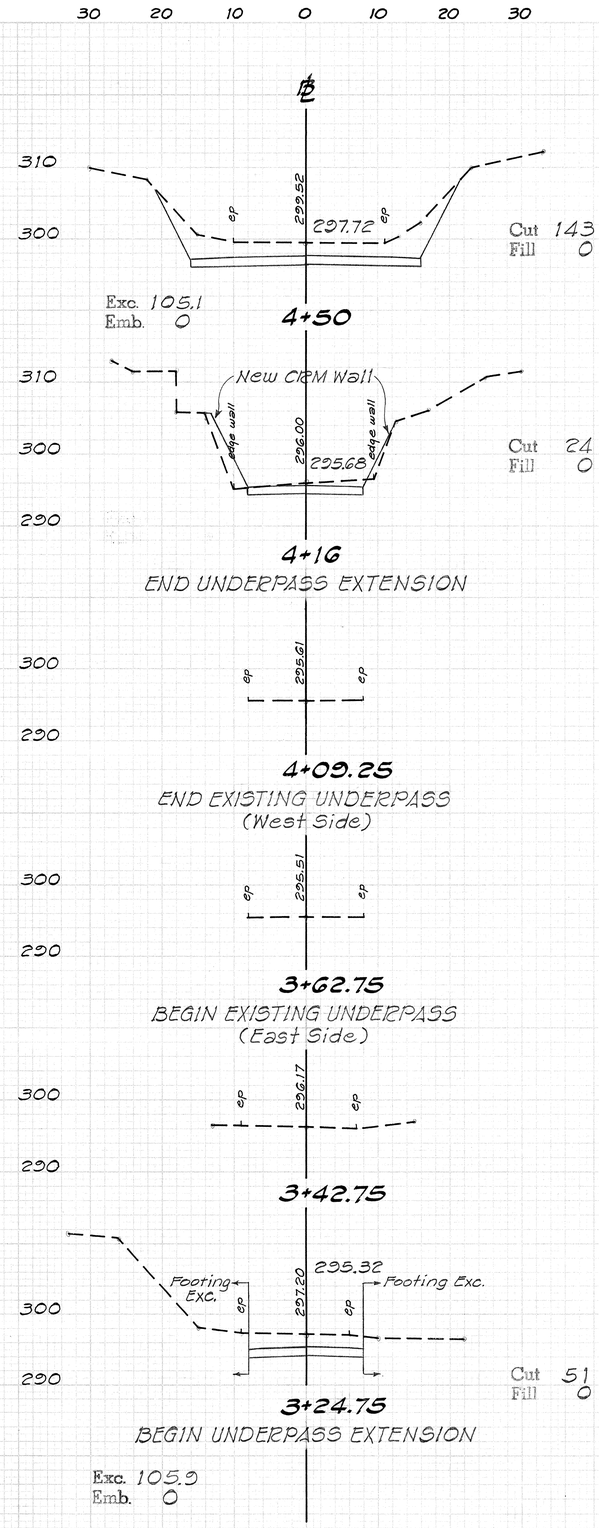

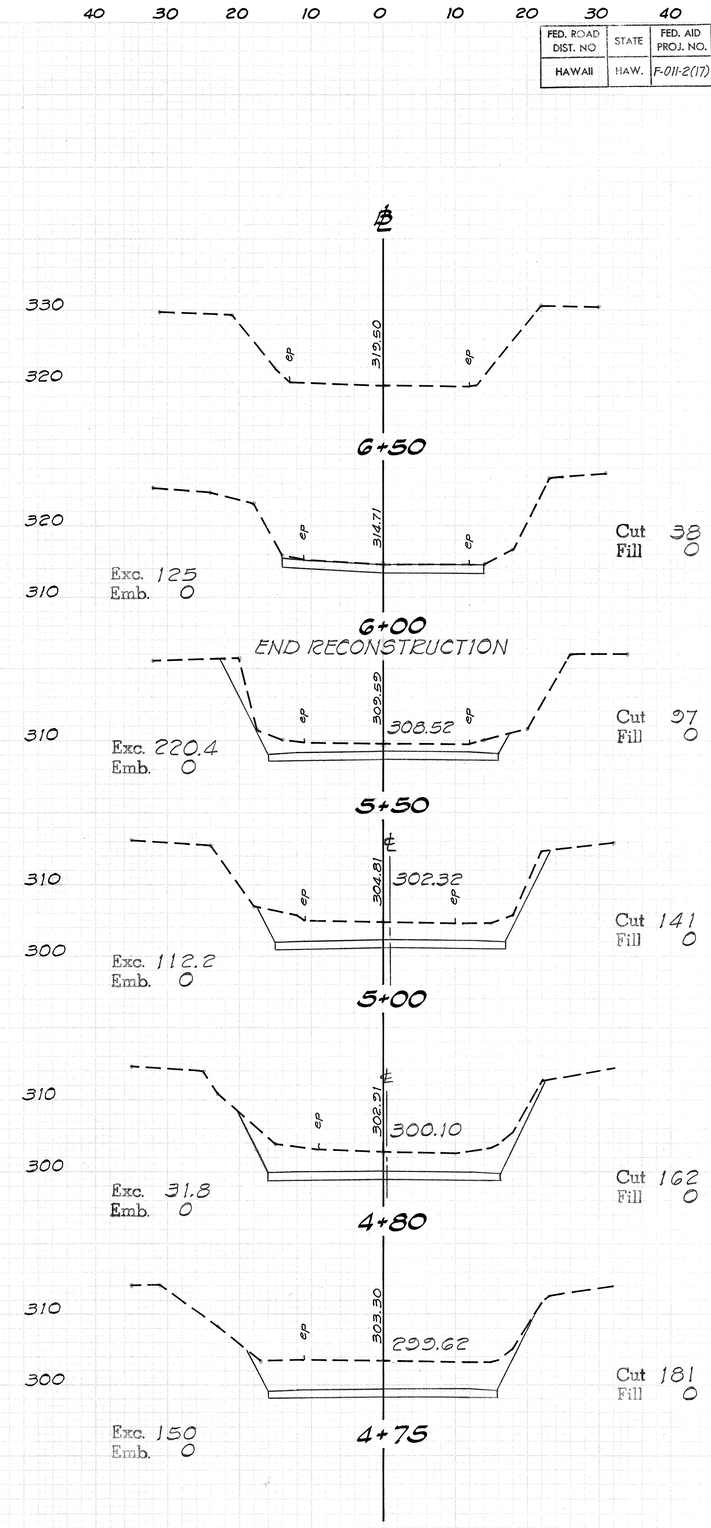

C.O. 22B

FINAL SURVEY — SURVEYED, PLOTTED, TEMPLATE, AREAS, AREAS CHECKED — NOTE BOOK — NO. — BY — DATE

ORIGINAL SURVEY — SURVEYED, PLOTTED, TEMPLATE, AREAS, AREAS CHECKED — NOTE BOOK C1323 — NO. PP 45-48

FED. ROAD DIST. NO.	STATE	FED. AID PROJ. NO.	FISCAL YEAR	SHEET NO.	TOTAL SHEETS
HAWAII	HAW.	F-011-2(17)	1986	23	142

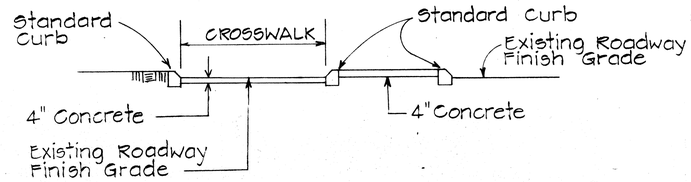

SECTION "A-A"

Use at Median Nose Crossings

Scale: 1" = 5'

For Additional Details, See Type "C" Wheel Chair Ramp

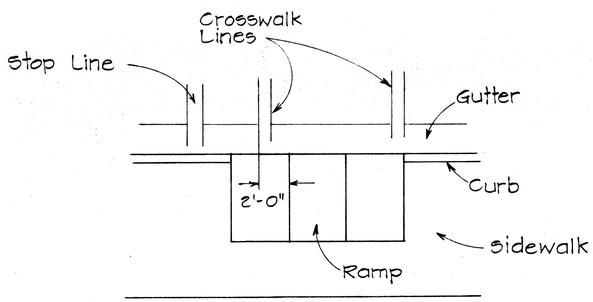

TYPICAL INSTALLATION AT CROSSWALKS

Scale: 1" = 5'

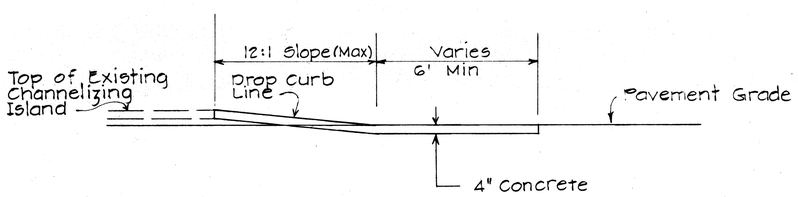

SECTION "B-B"

TYPE "B" MODIFIED WHEEL CHAIR RAMP

Use at Intersection of 2 Crosswalks On Channelizing Island

Scale: 3/8" = 1'

For Additional Details See Type "B" Wheelchair Ramp

NOTES

1. When necessary by existing physical conditions, alternate Wheel Chair Ramps may be used subject to Engineer's approval.
2. Subject to field conditions, the Engineer shall determine final location of Wheel Chair Ramp.
3. Where necessary pullboxes, handholes manholes etc. shall be adjusted to match Wheel Chair Ramp grade. Adjustments shall be considered incidental to Wheel Chair Ramp construction, unless otherwise noted.

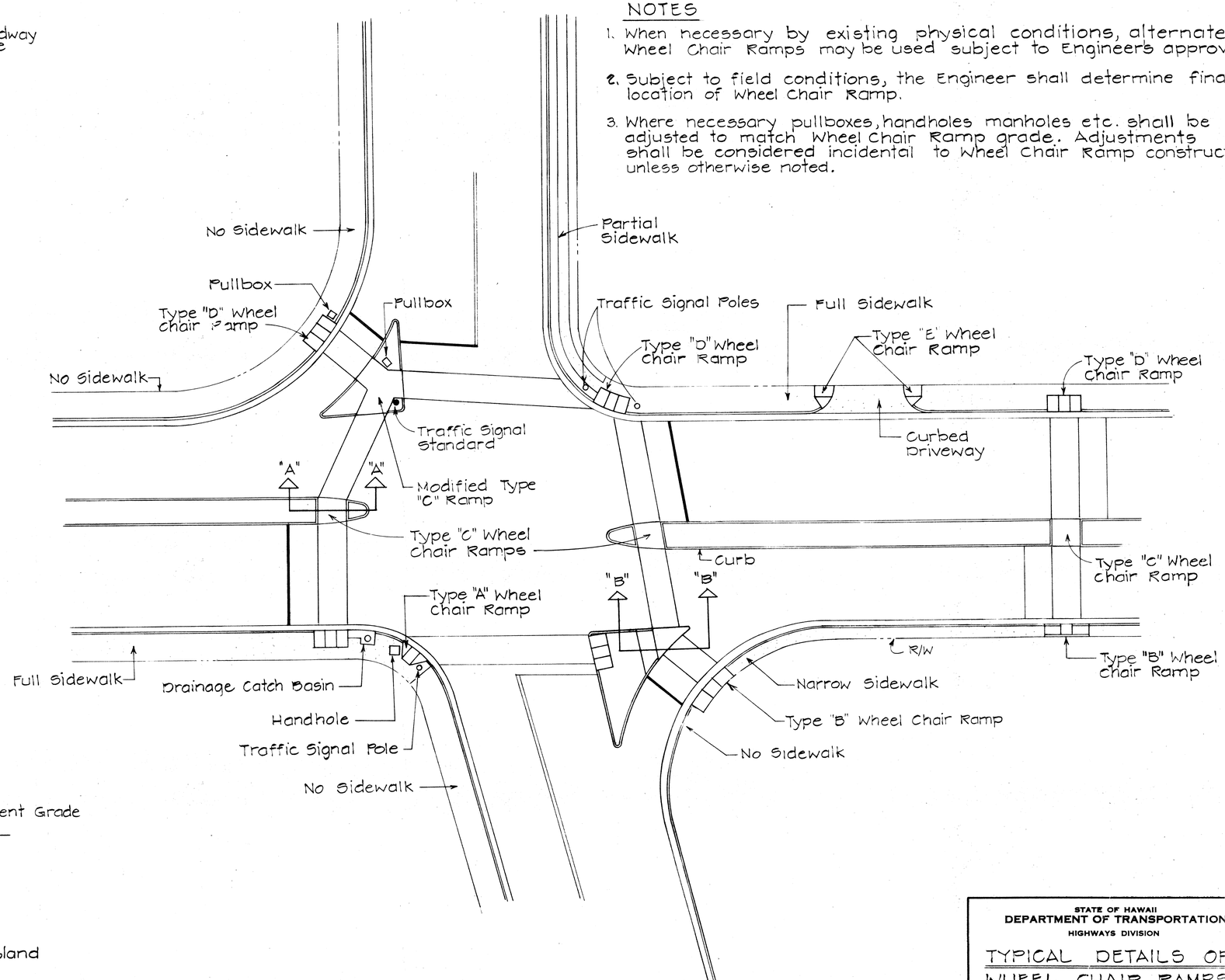

TYPICAL WHEELCHAIR RAMPS

Scale: 1" = 20'

STATE OF HAWAII
DEPARTMENT OF TRANSPORTATION
HIGHWAYS DIVISION

TYPICAL DETAILS OF WHEEL CHAIR RAMPS

Scale: As Shown May, 1978

SHEET No. 23 OF SHEETS

ORIGINAL PLAN	SURVEY PLOTTED BY	DATE
	DRAWN BY	
	TRACED BY	
NOTE BOOK No.	DESIGNED BY	
	QUANTITIES BY	
	CHECKED BY	

18

23

FED. ROAD DIST. NO.	STATE	FED. AID PROJ. NO.	FISCAL YEAR	SHEET NO.	TOTAL SHEETS
HAWAII	HAW.	F-011-2(17)	1986	24	142

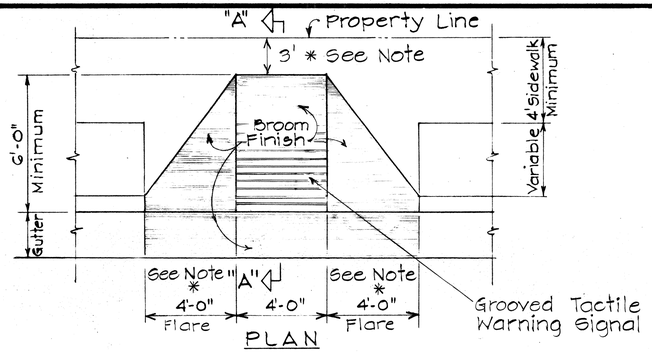

PLAN

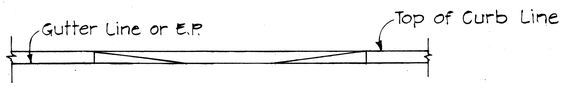

ELEVATION

* Where dimension is less than 3', Flare width shall be 5'

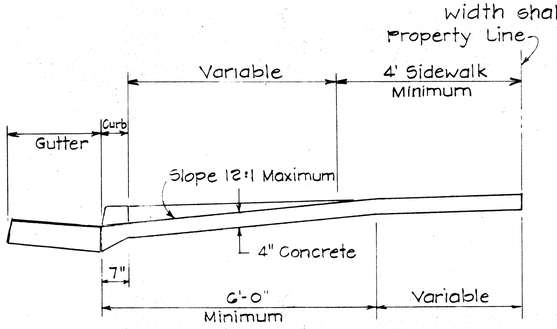

SECTION "A-A"

WHEELCHAIR RAMP - TYPE "A"

USE WHERE OBSTRUCTIONS EXIST

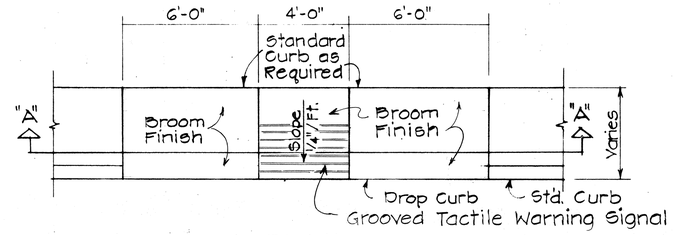

PLAN

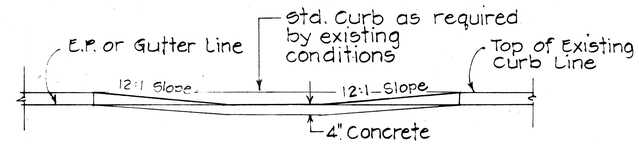

ELEVATION
SECTION "A-A"

WHEELCHAIR RAMP - TYPE "B"

USE AT SIDEWALKS WITH LESS THAN 6'-0" WIDTH

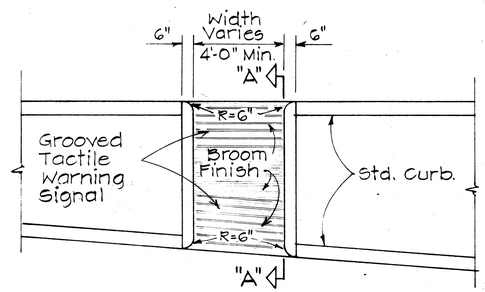

PLAN

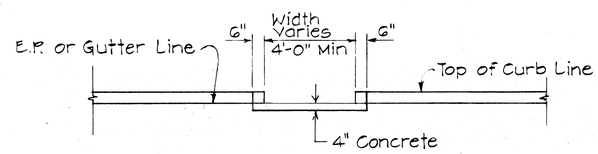

ELEVATION

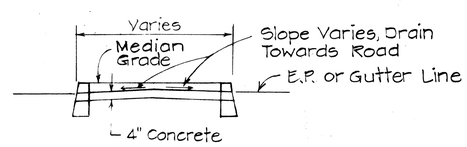

SECTION "A-A"

WHEELCHAIR RAMP - TYPE "C"

USE AT MEDIAN CROSSINGS, ISLANDS

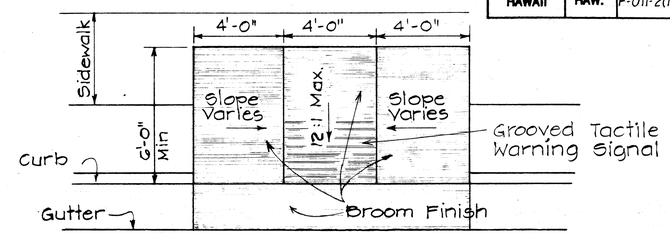

PLAN
Scale: 3/8" = 1'-0"

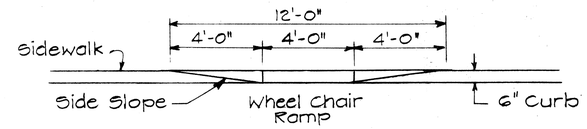

ELEVATION
Scale: 3/8" = 1'-0"

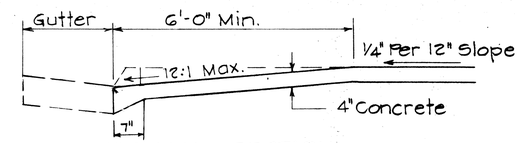

TYPICAL SECTION
Scale: 3/4" = 1'-0"

WHEELCHAIR RAMP - TYPE "D"

USE WHEN IDEAL CONDITIONS EXIST

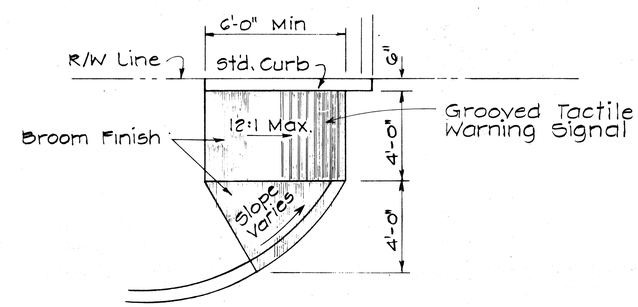

WHEELCHAIR RAMP - TYPE "E"

USE AT CURBED DRIVEWAYS
Scale: 3/8" = 1'-0"

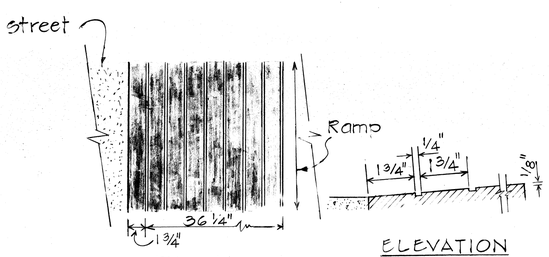

PLAN ELEVATION

GROOVED TACTILE WARNING SIGNAL

ORIGINAL PLAN	SURVEY PLOTTED BY	DATE
	DRAWN BY	
	TRACED BY	
NOTE BOOK	DESIGNED BY	
	QUANTITIES BY	
No.	CHECKED BY	

STATE OF HAWAII
DEPARTMENT OF TRANSPORTATION
HIGHWAYS DIVISION

TYPICAL DETAILS OF WHEEL CHAIR RAMPS

Scale: As Shown May, 1978

SHEET No. 24 OF SHEETS

FED. ROAD DIST. NO.	STATE	FED. AID PROJ. NO.	FISCAL YEAR	SHEET NO.	TOTAL SHEETS
HAWAII	HAW.	F-011-2(17)	1986	25	142

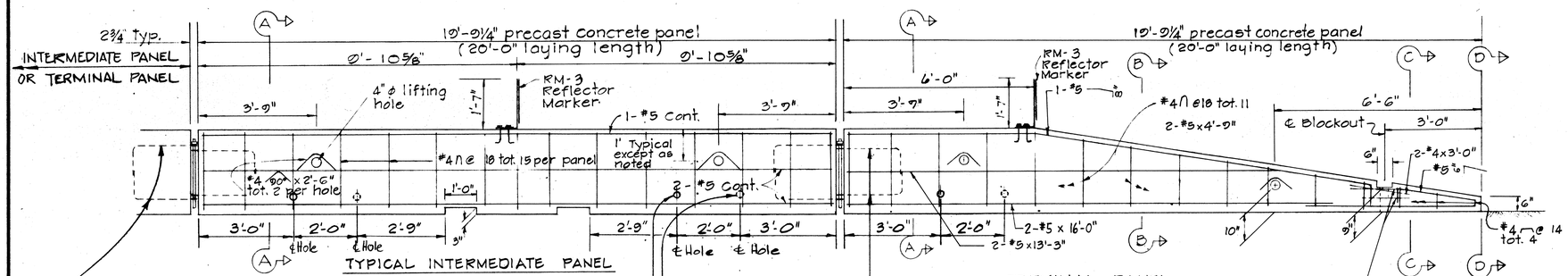

TYPICAL INTERMEDIATE PANEL

Concrete: 1.93 c.y. per panel
Reinf: 169 lbs. per panel
Weight 3.9 tons per panel

50% of all terminal panels to have connection bar arrangement as shown

Ground Anchorage Hole - near side
Ground Anchorage Hole - far side

ELEVATION
Scale: ½" = 1'-0"

TERMINAL PANEL

Concrete: 1.55 c.y. per panel
Reinf: 144 lbs. per panel
Weight: 3.1 tons per panel

50% of all terminal panels to have connection bar arrangement as shown

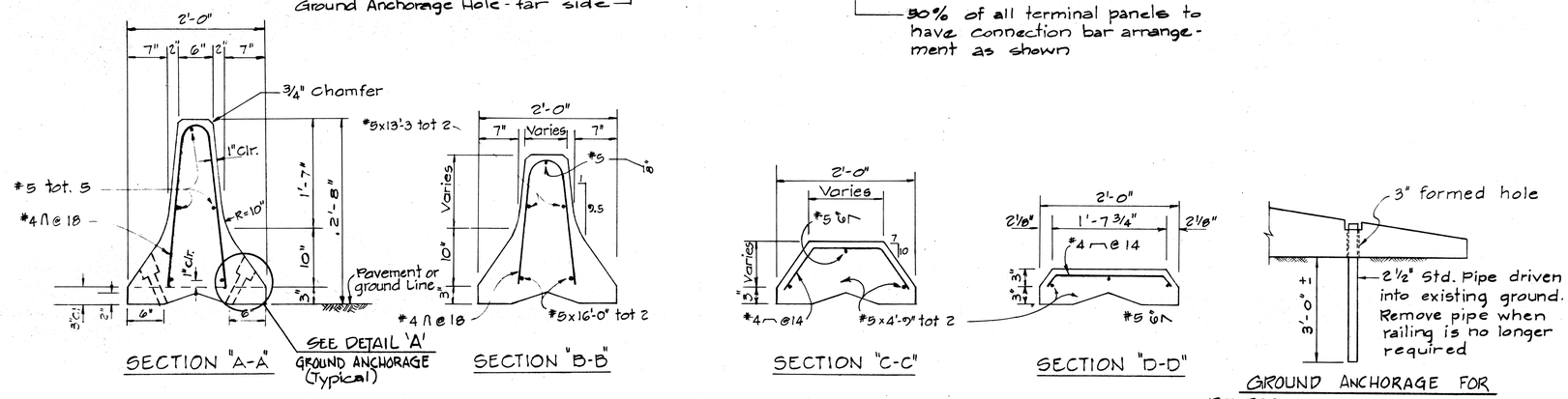

SECTION "A-A"

SECTION "B-B"

SECTION "C-C"

SECTION "D-D"

SECTIONS
Scale: 1" = 1'-0"

GROUND ANCHORAGE FOR RAMPED END OF TERMINAL PANEL
Scale: ½" = 1'-0"

NOTES

1. For details not shown in Sections BB, C-C, & D-D, see Section A-A
2. Reflector Marker shall not be paid for separately but shall be considered incidental to "Portable Concrete Guard Rail."
3. Concrete shall be Class "A".
4. All bolts to have cut washers unless otherwise noted.

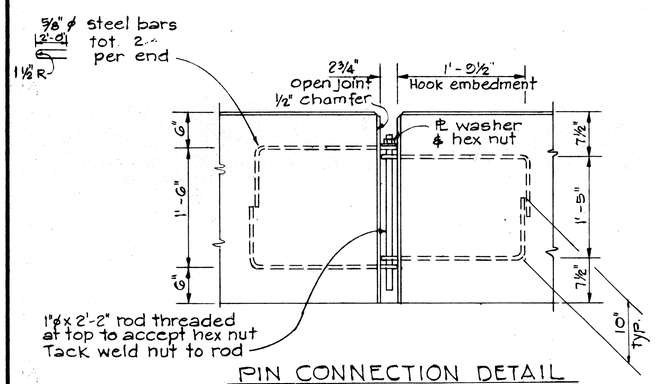

PIN CONNECTION DETAIL
Scale: 1" = 1'-0"

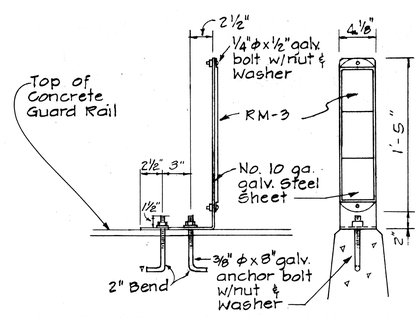

SIDE FRONT

REFLECTOR MARKER MOUNTING DETAIL
Scale: 1½" = 1'-0"

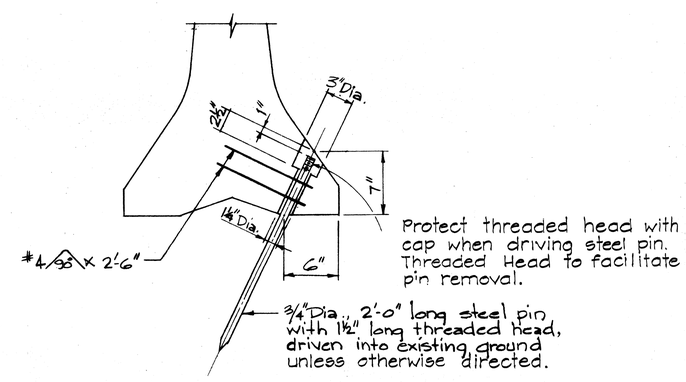

DETAIL A - GROUND ANCHORAGE
Scale: 1½" = 1'-0"

STATE OF HAWAII
DEPARTMENT OF TRANSPORTATION
HIGHWAYS DIVISION

PORTABLE CONCRETE GUARD RAIL TYPICAL DETAILS

Scale: As Noted Date:

SHEET No. OF SHEETS

25

ORIGINAL PLAN | SURVEY PLOTTED BY | DESIGNED BY | TRACED BY | DESIGNED BY | NOTE BOOK | CHECKED BY | CHECKED BY | DATE | No.

FED. ROAD DIST. NO.	STATE	FED. AID PROJ. NO.	FISCAL YEAR	SHEET NO.	TOTAL SHEETS
HAWAII	HAW.	F-011-2(17)	1986	26	142

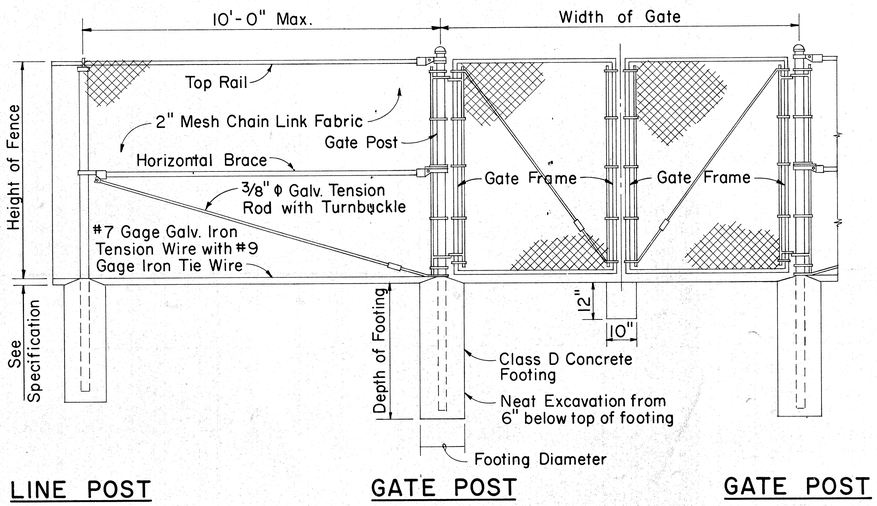

DETAIL OF CHAIN LINK GATE

NOTE: 1. Gate fork latch and lock, flush plate and anchor, and plunger shall be installed with Gates, and shall be considered as incidental to Chain Link Fence Gate.

2. Gate frames shall be mitered and welded at corners.

3. Fence detail not shown shall be in accordance with the Standard Specifications.

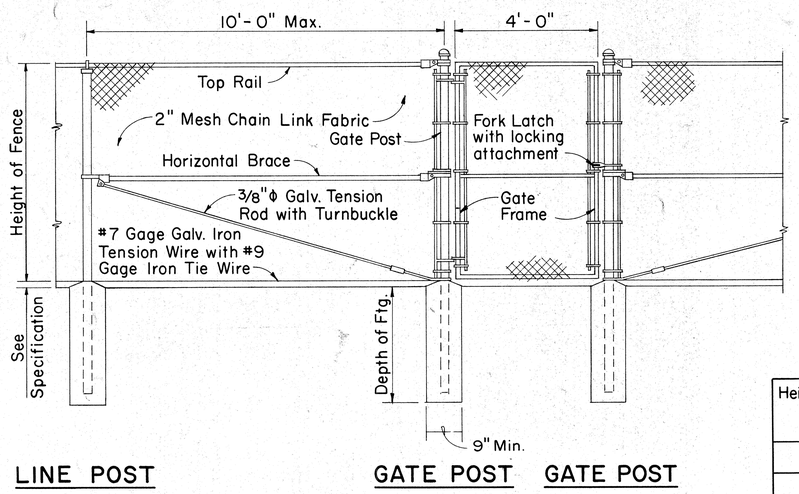

DETAIL OF 4 FT. CHAIN LINK GATE

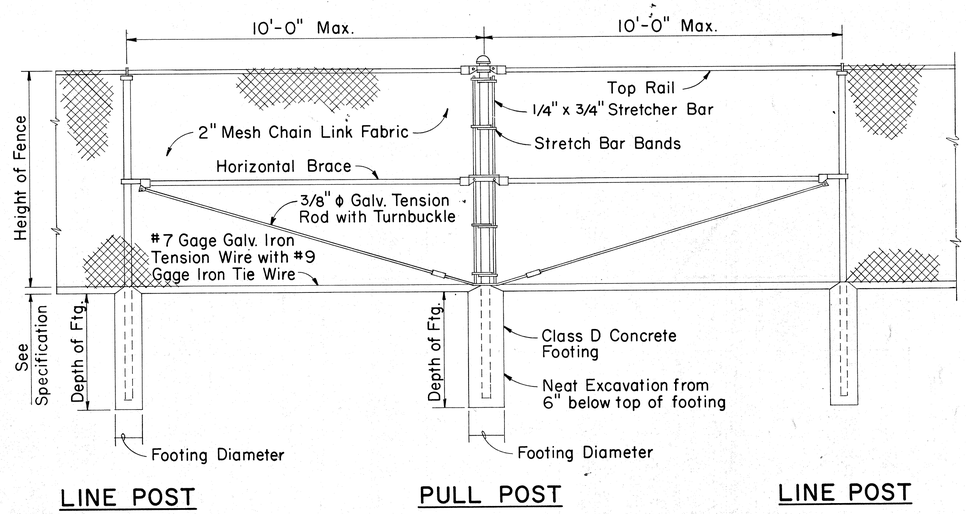

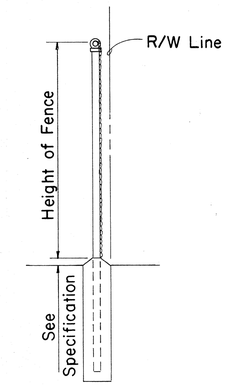

TYPICAL SECTION (WITH CONCRETE FOOTING)

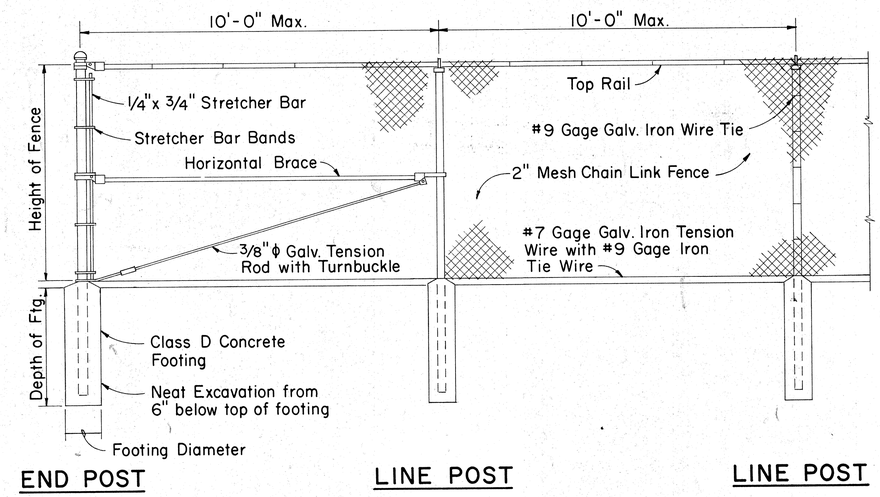

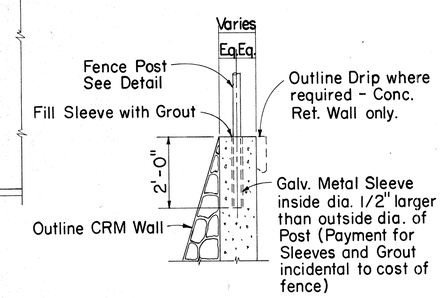

TYPICAL SECTION (ON CRM & CONC. RET. WALL)

CHAIN LINK FENCE DETAILS

Height of Fence	Minimum Depth of Footing		Minimum Footing Diameter	
	Line Post	Corner, Pull, End and Gate Posts	Line Post	Corner, Pull and End Posts
3'	2'-0"	2'-6"	8"	8"
4'	2'-6"	2'-6"	8"	8"
5'	3'-0"	3'-0"	8"	8"
6'	3'-0"	3'-0"	8"	9"

APPROVAL RECOMMENDED:
M. Hirano — 12-4-69
HIGHWAY DESIGN ENGINEER — DATE

APPROVED:
Walter S. Zadoki — 12-10-69
ASSISTANT CHIEF, ENGINEERING — DATE

NO	REVISION	APPROVED BY	DATE

STATE OF HAWAII
DEPARTMENT OF TRANSPORTATION
HIGHWAYS DIVISION

STANDARD DETAILS

CHAIN LINK FENCE (WITH TOPRAIL)

Scale: 1/2" = 1'-0" Date:

SHEET No. OF SHEETS | DD 607.1

26

ORIGINAL PLAN | SURVEY PLOTTED BY | DRAWN BY | TRACED BY | DESIGNED BY | QUANTITIES BY | CHECKED BY | DATE | NOTE BOOK No.

FED. ROAD DIST. NO.	STATE	FED. AID PROJ. NO.	FISCAL YEAR	SHEET NO.	TOTAL SHEETS
HAWAII	HAW.	F-011-2(17)	1986	27	142

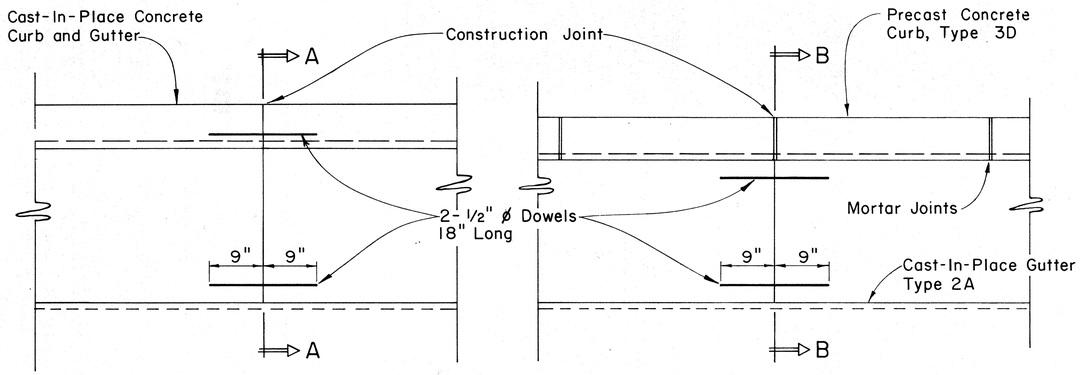

PLAN PLAN

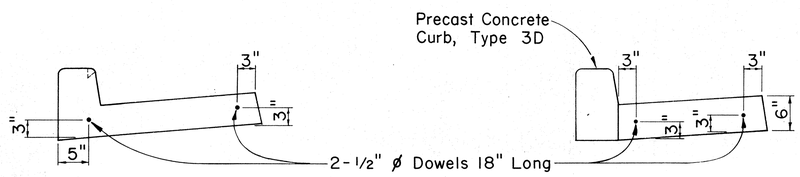

SECTION A-A SECTION B-B

CAST-IN-PLACE CURB & GUTTER CAST-IN-PLACE GUTTER

CONSTRUCTION JOINT DETAIL

Scale: 1" = 1'-0"

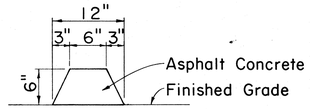

CURB, TYPE 6

BITUMINOUS CURB

Scale: 1 1/2" = 1'-0"

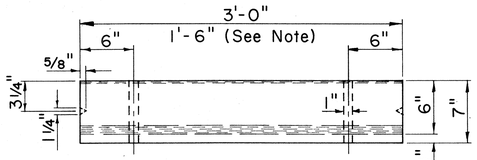

PLAN

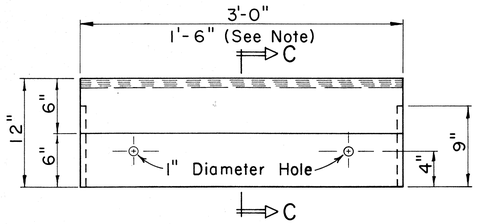

ELEVATION

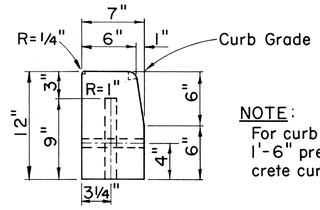

NOTE:
For curb returns use 1'-6" pre-cast concrete curbs.

SECTION C-C

CURB, TYPE 3D

PRE-CAST CONC. CURB

Scale: 1 1/2" = 1'-0"

NOTES

1. Cast-In-Place P.C.C. Gutters shall be longitudinally broom finished.
2. Curb, Type 2A, Curb & Gutter, Type 2AG, and Curb & Gutter, Type 2AGM are to be used only for reconstructing short segments of existing curbs and/or gutters of the same type.
3. The top of all types of concrete curbs, including driveway curbs shall be longitudinally broom finished.

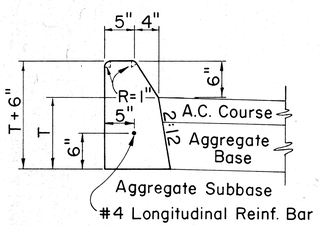

CURB, TYPE 2A

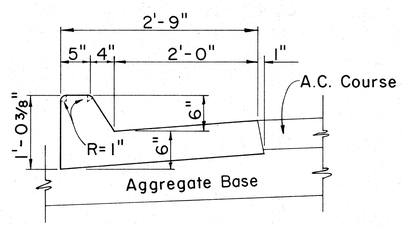

CURB & GUTTER, TYPE 2AG

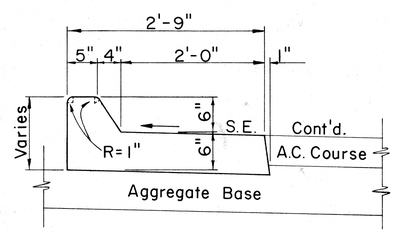

CURB & GUTTER, TYPE 2AGM

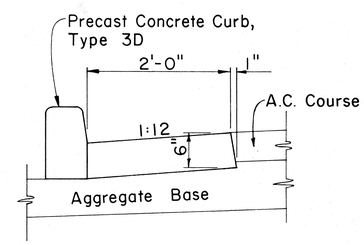

GUTTER, TYPE 2A

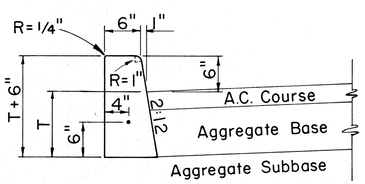

CURB, TYPE 2D

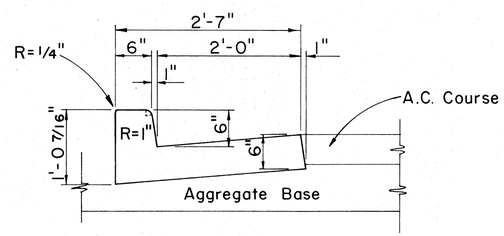

CURB & GUTTER, TYPE 2DG

CAST-IN-PLACE CONCRETE CURBS AND/OR GUTTERS

Scale: 1" = 1'-0"

ORIGINAL PLAN		DATE
	SURVEY PLOTTED BY	
	DRAWN BY	" " "
	TRACED BY	" " "
NOTE BOOK	DESIGNED BY	" " "
No.	QUANTITIES BY	
	CHECKED BY	

APPROVAL RECOMMENDED:
M. Hirozawa — HIGHWAY DESIGN ENGINEER — 12-4-89 DATE

APPROVED:
Walter G. Bedford — ASSISTANT CHIEF, ENGINEERING — 12-10-89 DATE

NO.	REVISION	APPROVED BY	DATE
1	Add Notes, Deleted Gutter, Type 2G		11-26-84

STATE OF HAWAII
DEPARTMENT OF TRANSPORTATION
HIGHWAYS DIVISION

STANDARD DETAILS

TYPICAL DETAILS OF CURB AND/OR GUTTERS

Scale: As Shown

SHEET No. OF SHEETS | DD 609.1

FED. ROAD DIST. NO.	STATE	FED. AID PROJ. NO.	FISCAL YEAR	SHEET NO.	TOTAL SHEETS
HAWAII	HAW.	F-011-2(17)	1986	28	142

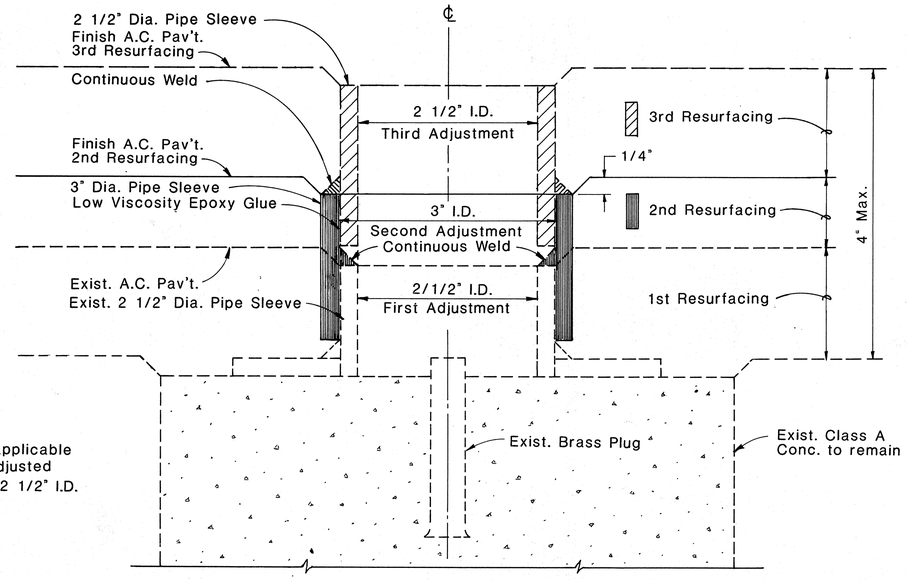

NOTE:
This detail is applicable only if initial adjusted pipe sleeve is 2 1/2" I.D.

DETAIL FOR CENTERLINE MONUMENT (2ND & 3RD) ADJUSTMENTS

FULL SIZE

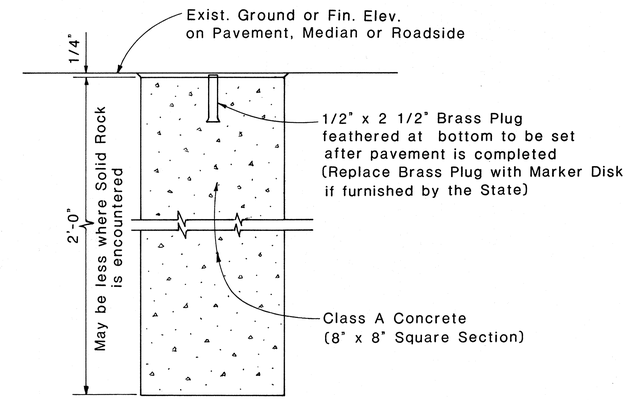

DETAIL FOR CENTERLINE & REFERENCE SURVEY MONUMENT

Scale: 1 1/2" = 1'-0"

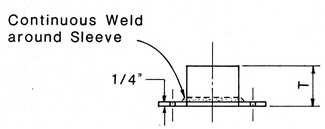

T = New Resurfacing Thickness

PIPE SLEEVE & PLATE ELEVATION

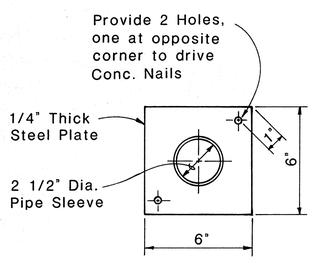

PIPE SLEEVE & PLATE PLAN

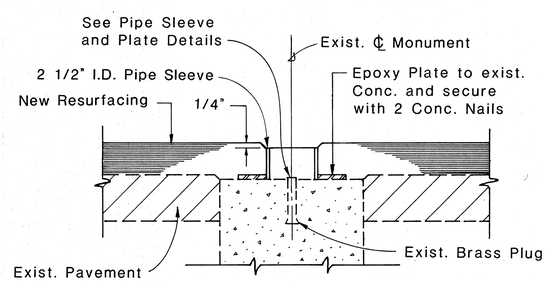

SECTION THRU MONUMENT

NOTE
These Adjustment Details also apply to Centerline Monuments utilized as Stationline Reference Points.

DETAILS FOR ADJUSTED CENTERLINE MONUMENT

Scale: 3" = 1'-0"

ORIGINAL PLAN	SURVEY PLOTTED BY	DATE
	DRAWN BY	
NOTE BOOK	TRACED BY	
	DESIGNED BY	
	QUANTITIES BY	
No.	CHECKED BY	

APPROVAL RECOMMENDED:

Mike Mimura — 6-20-83
HIGHWAY DESIGN ENGINEER — DATE

APPROVED:

S. Tsujiyama — 6-22-83
ASSISTANT CHIEF, ENGINEERING — DATE

NO.	REVISION	APPROVED BY	APPROVED DATE
1	Delete Note No. 1		11-19-84

STATE OF HAWAII
DEPARTMENT OF TRANSPORTATION
HIGHWAYS DIVISION

STANDARD DETAILS

CENTERLINE AND REFERENCE SURVEY MONUMENT

Scale: As Shown Date: May, 1983

SHEET No. OF SHEETS DD613.1

FED. ROAD DIST. NO.	STATE	FED. AID PROJ. NO.	FISCAL YEAR	SHEET NO.	TOTAL SHEETS
HAWAII	HAWAII	F-011-2(17)	1986	29	142

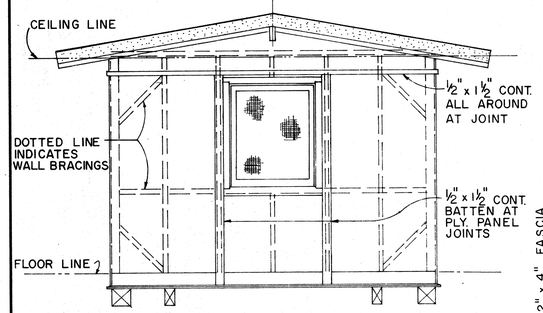

ELEVATION Ⓑ

ELEVATION Ⓓ SIMILAR

SCALE: 3/8" = 1'-0"

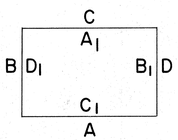

EXTERIOR & INTERIOR KEY

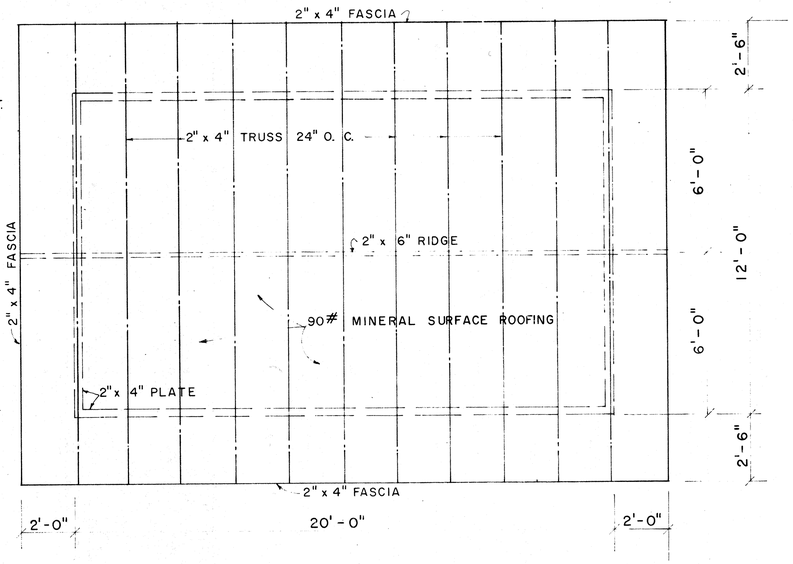

ROOF FRAMING PLAN

SCALE: 3/8" = 1'-0"

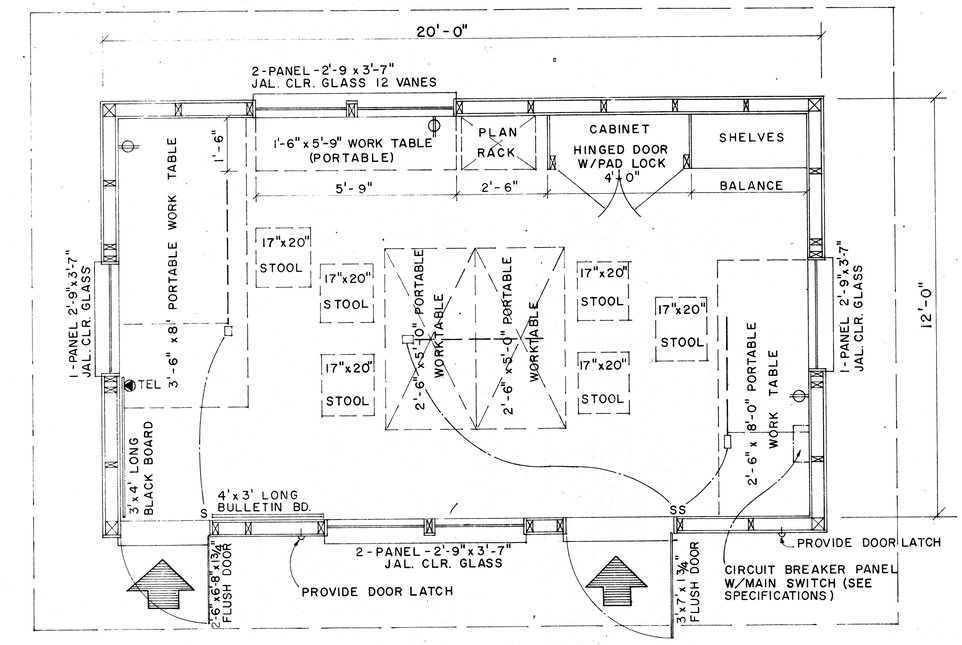

FLOOR PLAN

SCALE: ½" = 1'-0"

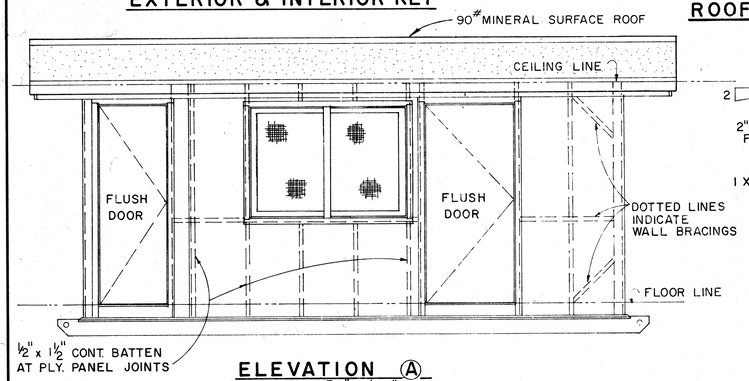

ELEVATION Ⓐ

SCALE: 3/8" = 1'-0"

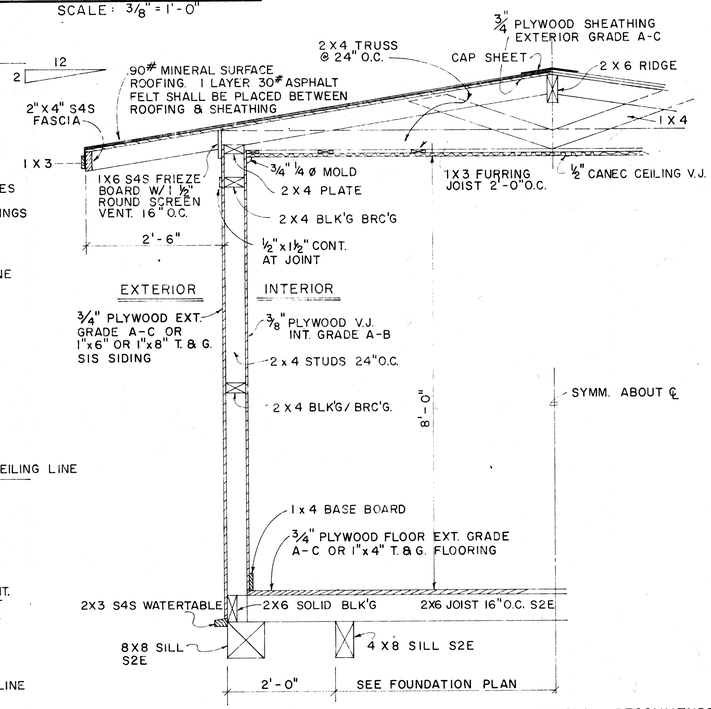

TYPICAL WALL SECTION

SCALE: ¾" = 1'-0"

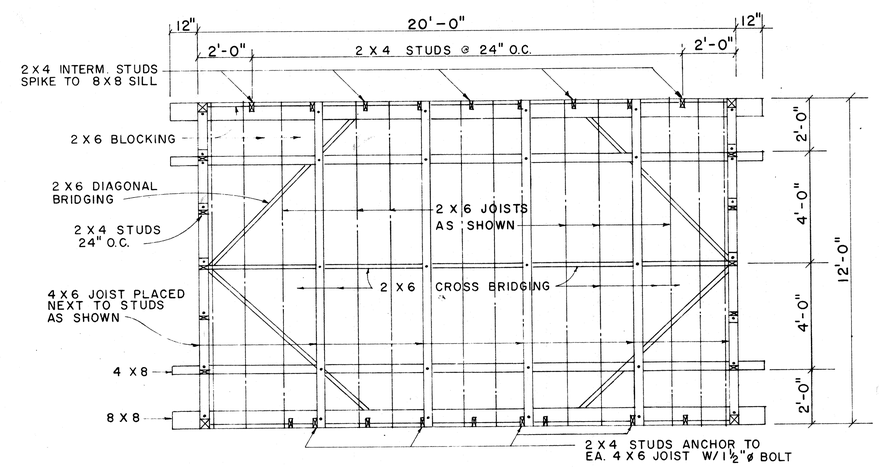

FOUNDATION FRAMING PLAN

SCALE: 3/8" = 1'-0"

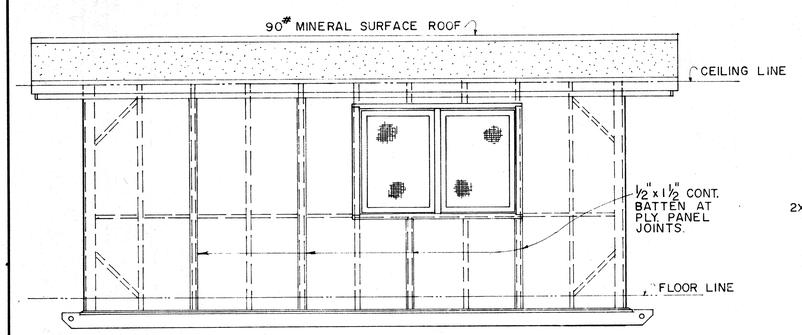

ELEVATION Ⓒ

SCALE: 3/8" = 1'-0"

APPROVAL RECOMMENDED:

M. Hirozawa — 12-4-69

HIGHWAY DESIGN ENGINEER — DATE

APPROVED:

Shelby R. Sodetani — 12-10-69

ASSISTANT CHIEF, ENGINEERING — DATE

NO.	REVISION	APPROVED BY	DATE

STATE OF HAWAII
DEPARTMENT OF TRANSPORTATION
HIGHWAYS DIVISION

FIELD OFFICE

Scale : As Noted

SHEET Nº 29 OF SHEETS | DD 636.1

ORIGINAL PLAN	SURVEY PLOTTED BY	DATE
	DRAWN BY	
	TRACED BY	
	DESIGNED BY	
NOTE BOOK	QUANTITIES BY	
No.	CHECKED BY	

FED. ROAD DIST. NO.	STATE	FED. AID PROJ. NO.	FISCAL YEAR	SHEET NO.	TOTAL SHEETS
HAWAII	HAWAII	F-011-2(17)	1986	30	142

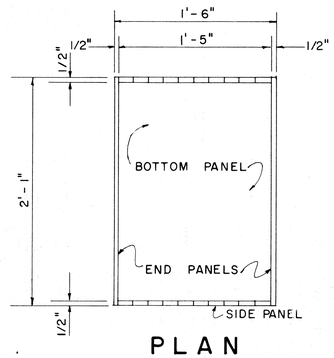

PLAN

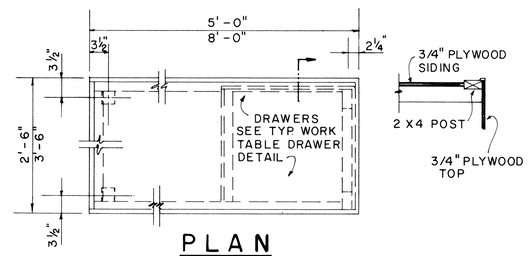

PLAN

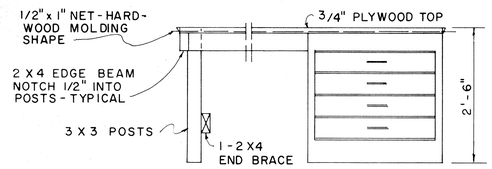

ELEVATION

2'-6" x 5'-0" 2 REQ'D.
3'-6" x 8'-0" 1 REQ'D
2'-6" x 8'-0" 1 REQ'D

PORTABLE WORK TABLE DETAIL

SCALE: 3/4" = 1'-0"

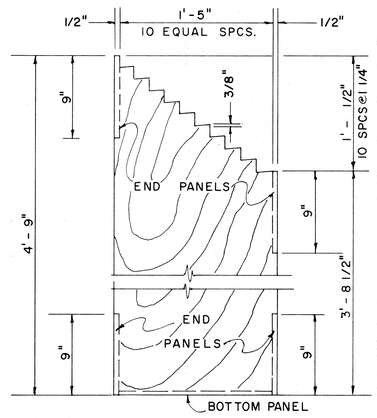

END ELEVATION

PLAN RACK DETAIL

SCALE: 1 1/2" = 1'-0"

(ONE REQUIRED)

PLAN

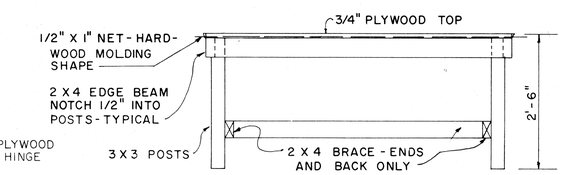

ELEVATION

1'-6" x 5'-9" PORTABLE WORK TABLE DETAIL

SCALE: 3/4" = 1'-0"

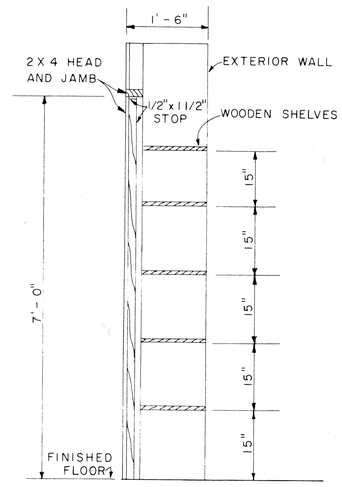

SECTION (G)

SCALE: 3/4" = 1'-0"

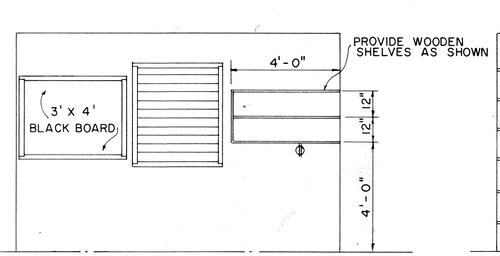

ELEVATION (D1)

SCALE: 3/8" = 1'-0"

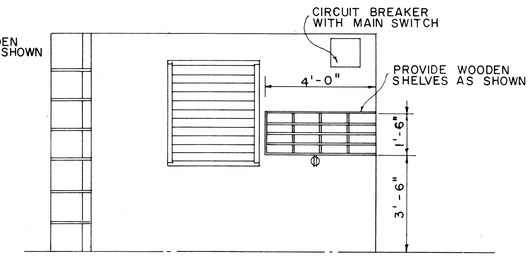

ELEVATION (B1)

SCALE: 3/8" = 1'-0"

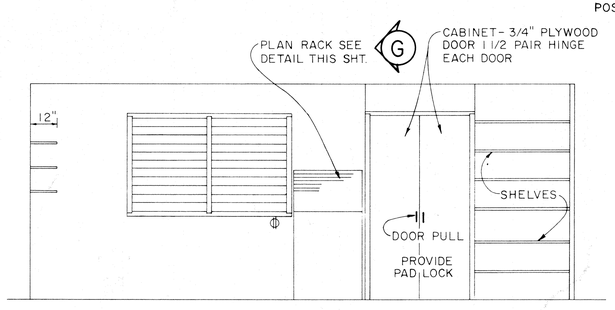

ELEVATION (A1)

SCALE: 3/8" = 1'-0"

APPROVAL RECOMMENDED

M. Hiozawa — HIGHWAY DESIGN ENGINEER — 12-4-69 DATE

APPROVED

Walter E. Rodrigues — ASSISTANT CHIEF, ENGINEERING — 12-10-69 DATE

NO.	REVISION	APPROVED BY	DATE

STATE OF HAWAII
DEPARTMENT OF TRANSPORTATION
HIGHWAYS DIVISION

FIELD OFFICE

Scale: As Noted

SHEET No. 30 OF SHEETS | DD 636.2

ORIGINAL PLAN	SURVEY PLOTTED BY	DATE
	DRAWN BY	
	TRACED BY	
NOTE BOOK	DESIGNED BY	
	QUANTITIES BY	
No.	CHECKED BY	

FED. ROAD DIST. NO.	STATE	FED. AID PROJ. NO.	FISCAL YEAR	SHEET NO.	TOTAL SHEETS
HAWAII	HAW.	F-011-2(17)	1986	31	142

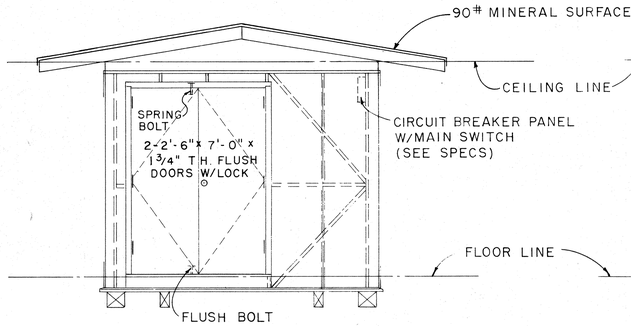

ELEVATION (B)

SCALE: 3/8" = 1'-0"

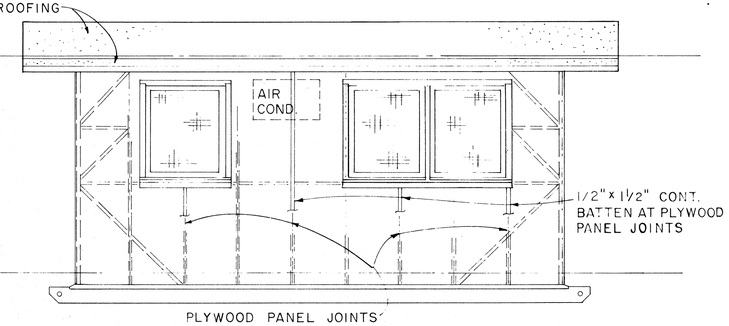

ELEVATION (A)

SCALE: 3/8" = 1'-0"

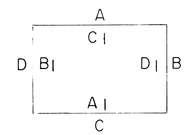

EXTERIOR & INTERIOR KEY

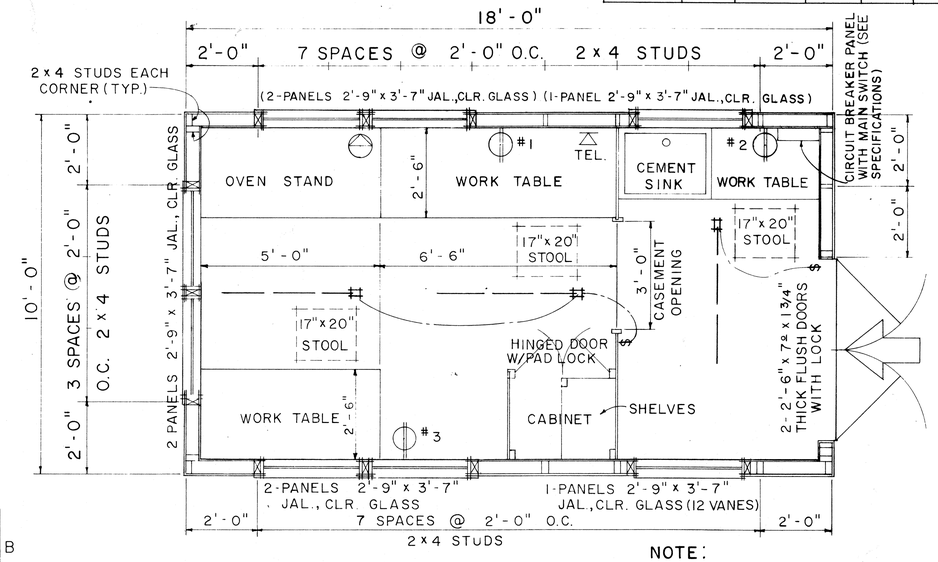

FLOOR PLAN

SCALE: 1/2" = 1'-0"

NOTE:

1. FLUORESCENT FIXTURE SHALL BE 48", 2 LAMP, 40 WATT, RAPID START.
2. TELEPHONE AND WALL OUTLET 4'-0" ABOVE FLOOR.

1-LAYER 30# ASPHALT FELT SHALL BE PLACED BETWEEN ROOFING AND SHEATHING.

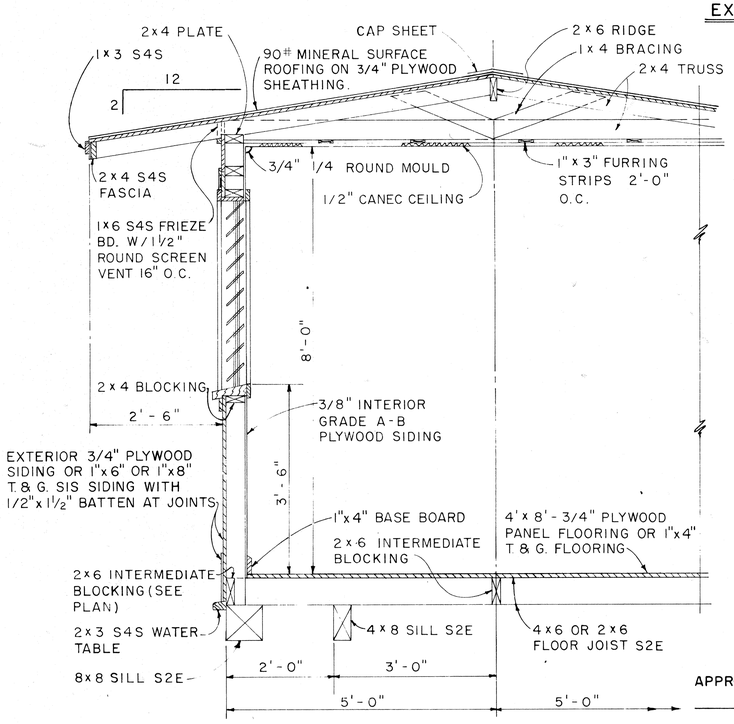

TYPICAL SECTION

SCALE: 3/4" = 1'-0"

NOTE:

ALL 3/4" PLYWOOD SHALL BE EXTERIOR GRADE A-C OR BETTER.

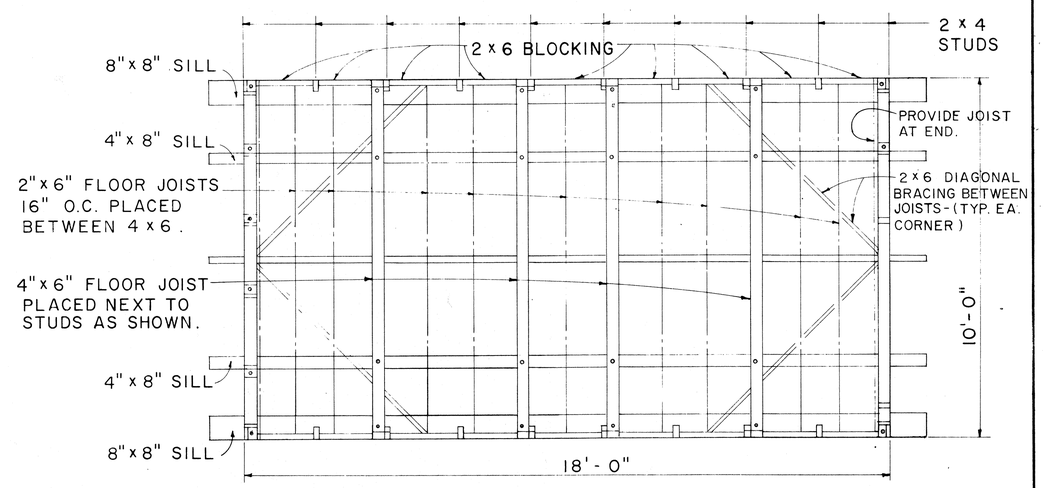

FLOOR FRAMING PLAN

SCALE: 1/2" = 1'-0"

APPROVAL RECOMMENDED:

HIGHWAY DESIGN ENGINEER — DATE 12-4-89

APPROVED:

ASSISTANT CHIEF, ENGINEERING — DATE 12-10-89

NO.	REVISION	APPROVED BY	DATE

STATE OF HAWAII
DEPARTMENT OF TRANSPORTATION
HIGHWAYS DIVISION

PROJECT SITE LABORATORY

Scale: As Noted

SHEET No. 31 OF SHEETS | DD 636.3

ORIGINAL PLAN	SURVEY PLOTTED BY	DATE
	DRAWN BY	"
	TRACED BY	"
NOTE BOOK	DESIGNED BY	"
	QUANTITIES BY	"
No.	CHECKED BY	"

FED. ROAD DIST. NO.	STATE	FED. AID PROJ. NO.	FISCAL YEAR	SHEET NO.	TOTAL SHEETS
HAWAII	HAW.	F-011-2(17)	1986	32	142

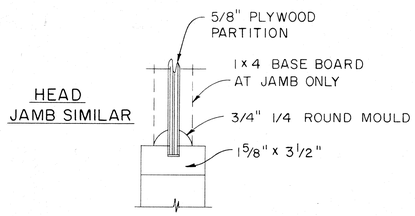

CASEMENT DETAIL

SCALE: 3" = 1'-0"

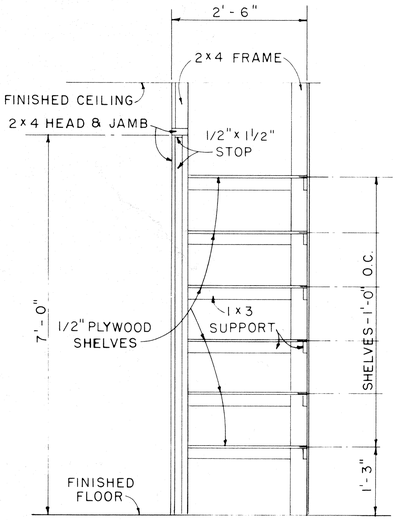

CABINET DETAIL

SCALE: 3/4" = 1'-0"

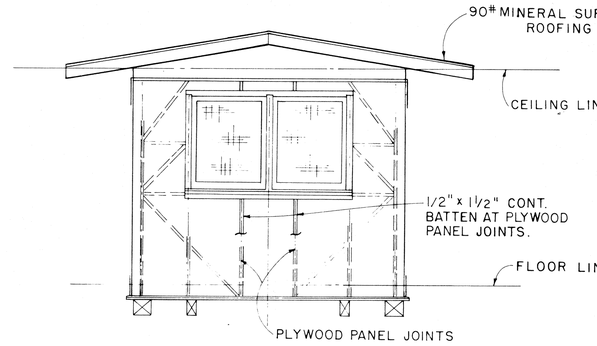

ELEVATION (D)

SCALE: 3/8" = 1'-0"

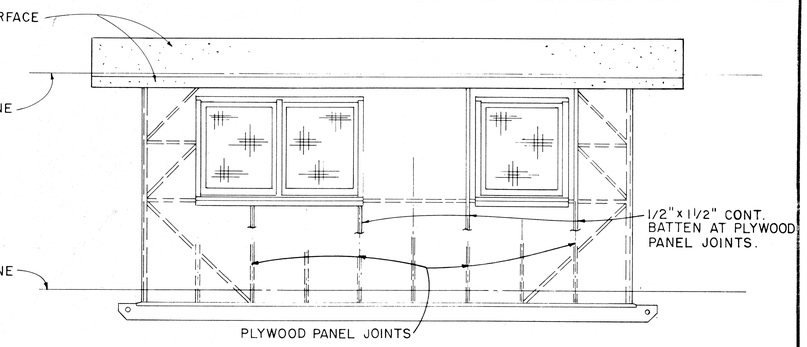

ELEVATION (C)

SCALE: 3/8" = 1'-0"

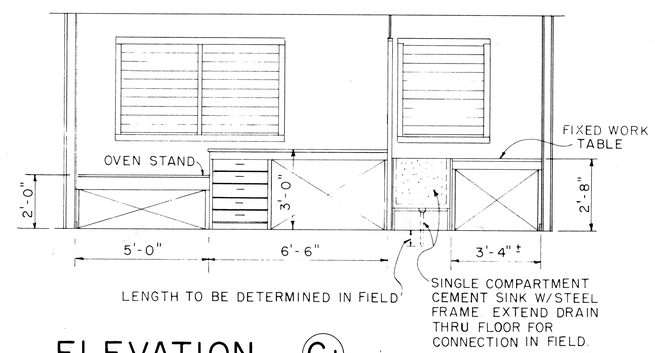

ELEVATION (C1)

SCALE: 3/8" = 1'-0"

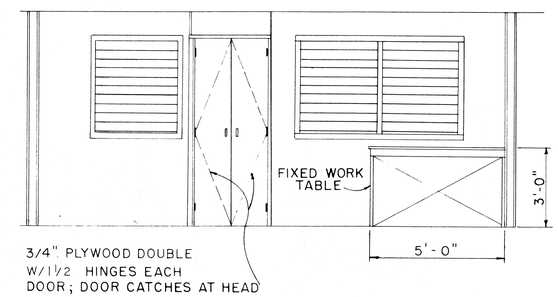

ELEVATION (A1)

SCALE: 3/8" = 1'-0"

APPROVAL RECOMMENDED:

HIGHWAY DESIGN ENGINEER — DATE 12-4-89

APPROVED:

ASSISTANT CHIEF, ENGINEERING — DATE 12-10-89

NO.	REVISION	APPROVED BY	DATE

STATE OF HAWAII
DEPARTMENT OF TRANSPORTATION
HIGHWAYS DIVISION

PROJECT SITE LABORATORY

Scale: As Noted

SHEET No. OF SHEETS | DD 636.4

32

ORIGINAL PLAN — SURVEY PLOTTED BY — DRAWN BY — TRACED BY — DESIGNED BY — QUANTITIES BY — CHECKED BY — DATE

NOTE BOOK No.

FED. ROAD DIST. NO.	STATE	FED. AID PROJ. NO.	FISCAL YEAR	SHEET NO.	TOTAL SHEETS
HAWAII	HAWAII	F-011-2(17)	1986	33	142

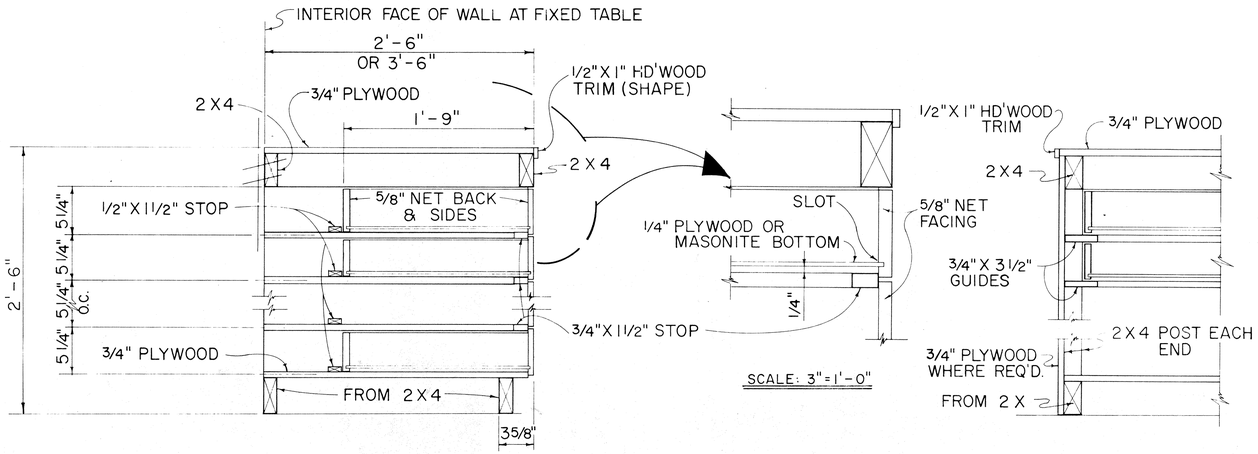

CROSS SECTION
SCALE: 1 1/2"=1'-0"

END SECTION
SCALE: 1 1/2"=1'-0"

TYPICAL WORK TABLE DRAWER DETAIL

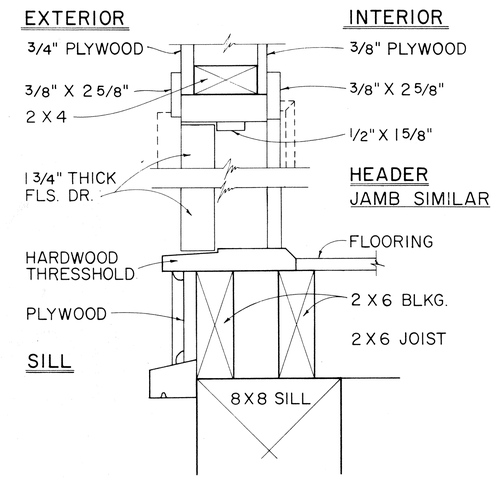

TYP. SWING OUT DOOR

TYPICAL SINGLE OR DOUBLE EXTERIOR DOOR DETAIL

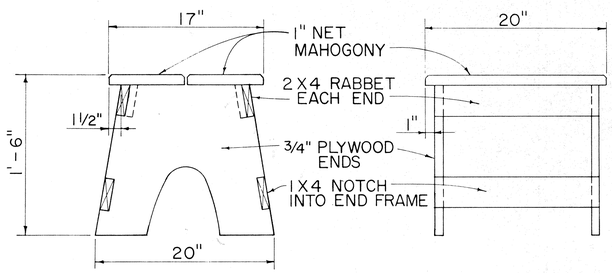

TYPICAL STOOL DETAIL

SCALE: 1 1/2"=1'-0"

NOTE: CONTRACTOR MAY WITH THE APPROVAL OF THE ENGINEER FURNISH THE FIELD OFFICE OR PROJECT SITE LABORATORY WITH STOOLS OTHER THAN THE TYPE SHOWN IN THE DETAIL.

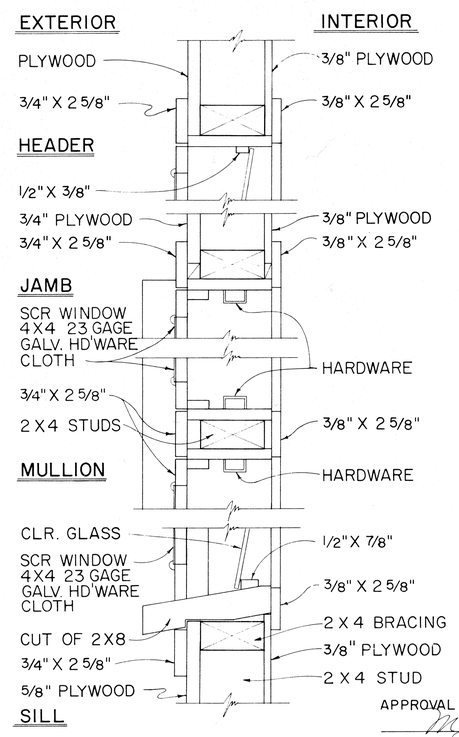

TYPICAL DETAIL JALOUSIES WINDOWS

SCALE: 3"=1'-0"

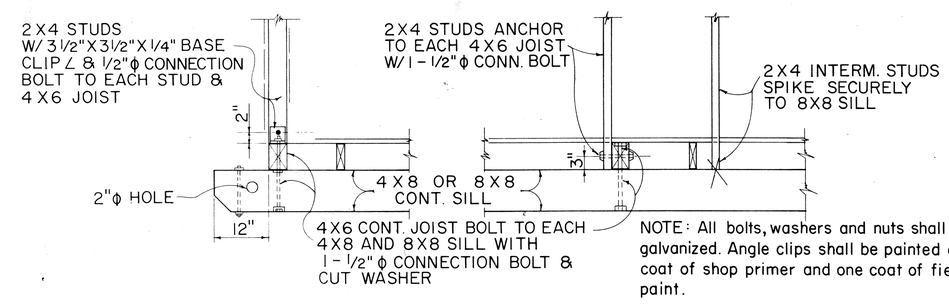

NOTE: All bolts, washers and nuts shall be galvanized. Angle clips shall be painted one coat of shop primer and one coat of field paint.

AT ENDS OF BLDG. ALONG SIDES OF BLDG.

TYPICAL 2X4 STUD & 4X6 FLOOR JOIST BASE CONNECTION DETAILS

APPROVAL RECOMMENDED:
M. Hirogawa — 12-4-69
HIGHWAY DESIGN ENGINEER — DATE

APPROVED:
[signature] — 12-10-69
ASSISTANT CHIEF, ENGINEERING — DATE

NO.	REVISION	APPROVED BY	DATE

STATE OF HAWAII
DEPARTMENT OF TRANSPORTATION
HIGHWAYS DIVISION

FIELD OFFICE
&
PROJECT SITE LABORATORY

Scale As Noted

SHEET No. OF SHEETS | DD 636.5

33

ORIGINAL PLAN	SURVEY PLOTTED BY	DATE
	DRAWN BY	"
	TRACED BY	"
NOTE BOOK	DESIGNED BY	"
	QUANTITIES BY	"
No.	CHECKED BY	"

FED. ROAD DIST. NO.	STATE	FED. AID PROJ. NO.	FISCAL YEAR	SHEET NO.	TOTAL SHEETS
HAWAII	HAW.	F-011-2(17)	1986	34	142

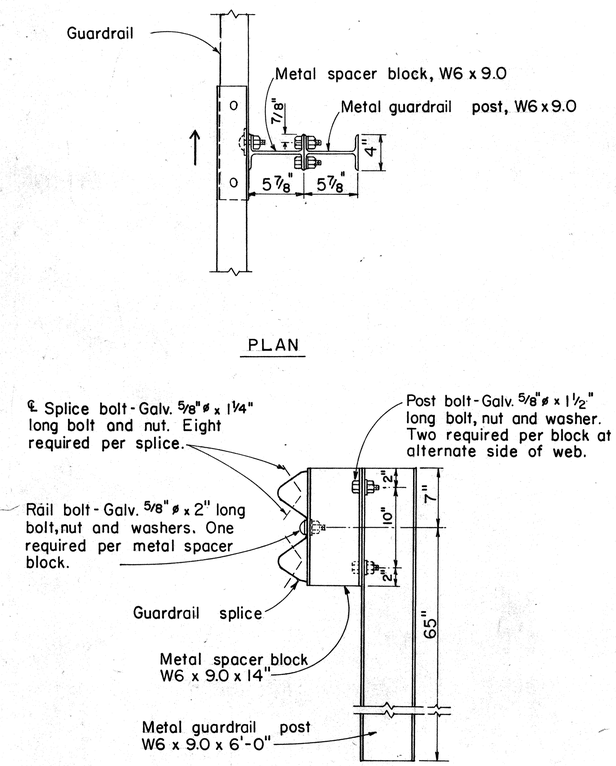

SINGLE METAL GUARDRAIL ON METAL POST WITH METAL SPACER BLOCK

SCALE: 1 1/2" = 1'-0"

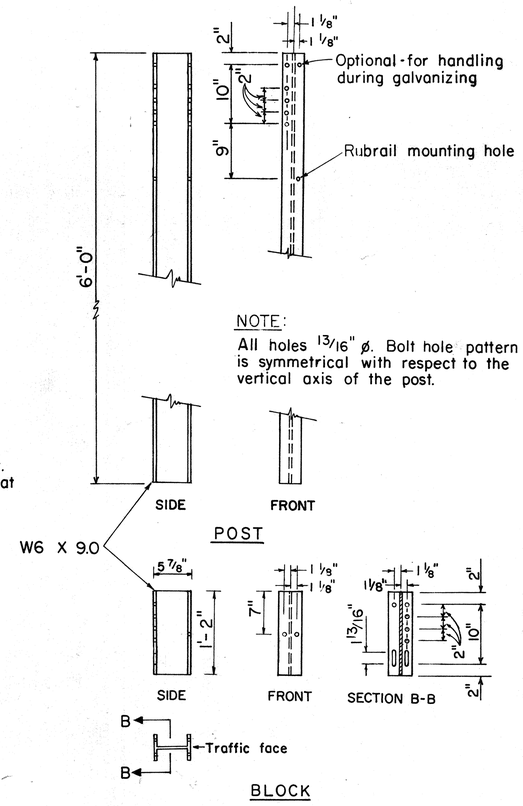

NOTE:
All holes 13/16" ø. Bolt hole pattern is symmetrical with respect to the vertical axis of the post.

STRUCTURAL SHAPE POST AND BLOCK

SCALE: 1" = 1'-0"

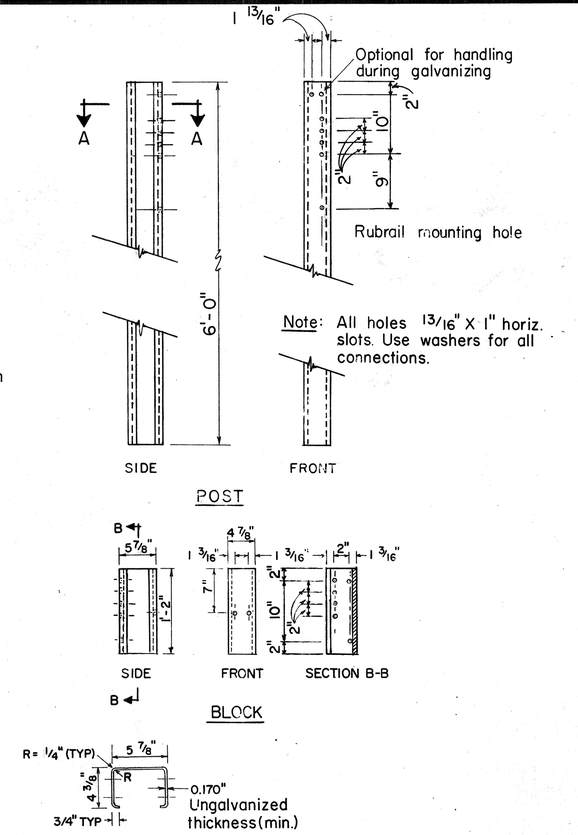

Note: All holes 13/16" X 1" horiz. slots. Use washers for all connections.

SECTION A-A
N.T.S.

BENT PLATE POST AND BLOCK

SCALE: 1" = 1'-0"

GENERAL NOTES

1. Both of the alternate type posts may be used on any one project however, only one type of post shall be used in any single run of guardrail.
2. All hardware, posts and blocks shall be galvanized. No punching, drilling or cutting will be permitted after galvanizing.
3. Connection details for bent plate post and block shall be similar to the details shown for structural shape post, and block.
4. Where conditions require, special post lengths in increments of 6 inches may be specified.
5. For details of rail elements, bolts and nuts, see sheet DT 501.
6. All fasteners, posts, blocks and rail elements shall conform to the latest edition and amendments of "A Guide to Standardized Highway Barrier Rail Hardware", a report prepared and approved by the AASHTO-AGC-ARTBA Joint Cooperative Committee.

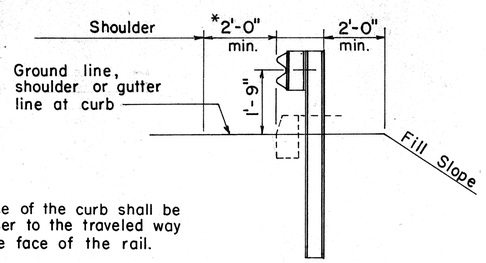

Note:
The face of the curb shall be no closer to the traveled way than the face of the rail.

TYPICAL METAL GUARDRAIL DETAIL

SCALE: 1/2" = 1'-0"

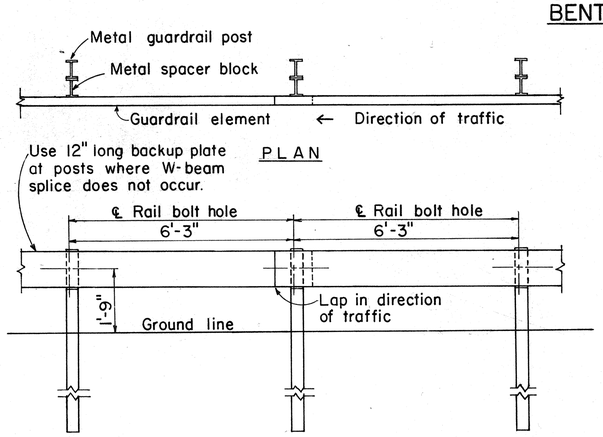

METAL GUARDRAIL ON METAL POST WITH METAL SPACER BLOCK

SCALE: 1/2" = 1'-0"

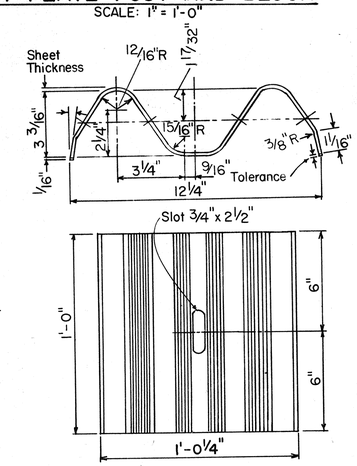

BACK-UP-PLATE

N.T.S.

APPROVAL RECOMMENDED:
Eiichi Tanaka — TRAFFIC ENGINEER — 9/7/82 DATE

APPROVED:
Herbert Sakishi — ASSISTANT CHIEF, ENGINEERING — 9/22/82 DATE

NO.	REVISION	APPROVED BY	DATE
1	Supersedes sht. DT 500 approved 12/30/69.	H.P.	9/22/82
2	Added General Notes No. 6	RDO	9-28-83
3	Added details for adjusting guardrail height and added Back-up Plate	E.T.	9/18/85

STATE OF HAWAII
DEPARTMENT OF TRANSPORTATION
HIGHWAYS DIVISION

STANDARD DETAILS

METAL GUARDRAIL

Scale: As Shown — July, 1982

SHEET No. OF SHEETS DT 500

ORIGINAL PLAN — SURVEY PLOTTED BY — DRAWN BY — TRACED BY — DESIGNED BY — QUANTITIES BY — CHECKED BY — DATE — NOTE BOOK No.

FED. ROAD DIST. NO.	STATE	FED. AID PROJ. NO.	FISCAL YEAR	SHEET NO.	TOTAL SHEETS
HAWAII	HAW.	F-011-2 (17)	1986	35	142

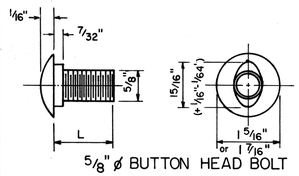

5/8" ø BUTTON HEAD BOLT

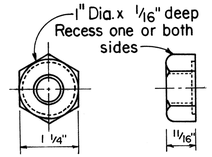

5/8" ø RECESS NUT

L	Thread Length	Intended Use
1 1/4"	Full length thread	Splice rail elements
2"	1 1/2" min. thread len.	Fasten rails to posts

5/8" BUTTON HEAD BOLT AND RECESS NUT

Scale: NTS

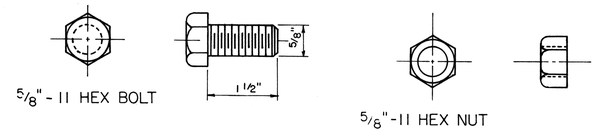

5/8"-11 HEX BOLT

5/8"-11 HEX NUT

5/8" HEX POST BOLT AND NUT

Scale: N.T.S.

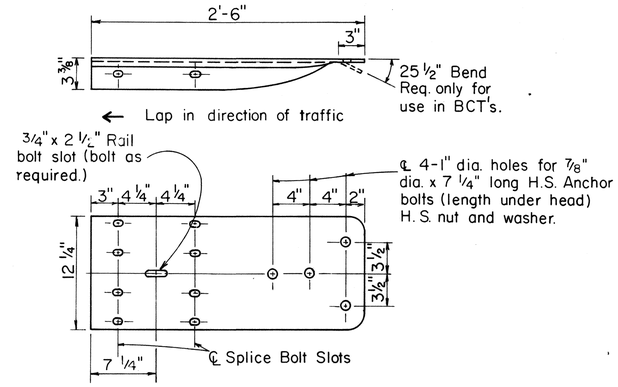

W BEAM TERMINAL CONNECTOR

Scale: 1 1/2" = 1'-0"

← Lap in direction of traffic

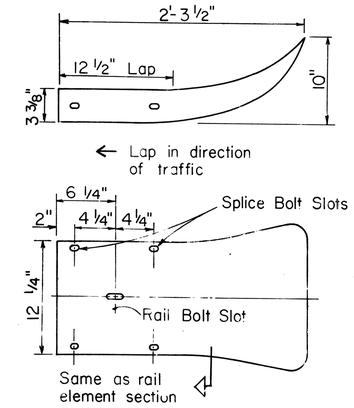

W BEAM END SECTION (FLARED)

Scale: 1 1/2" = 1'-0"

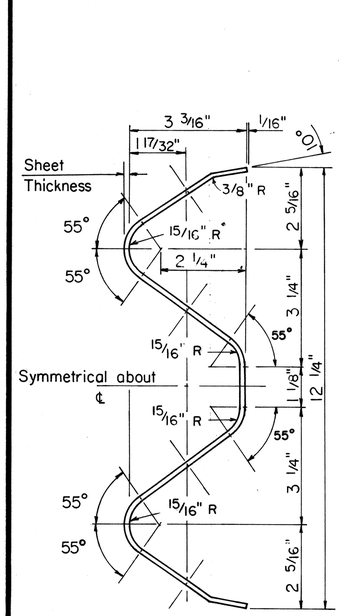

RAIL ELEMENT SECTION

Scale: 6" = 1'-0"

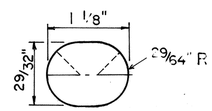

SPLICE BOLT SLOT

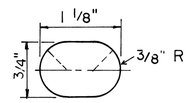

SPLICE BOLT SLOT FOR ALL ENDS

Scale: Full Size

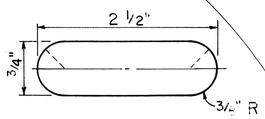

RAIL BOLT SLOT

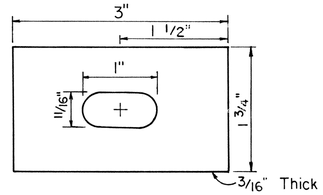

RAIL BOLT WASHER

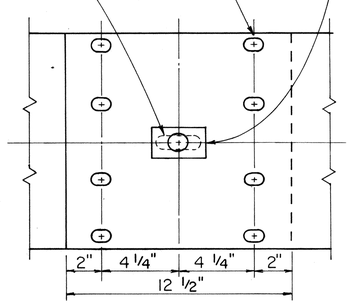

RAIL SPLICE

Scale: 3" = 1'-0"

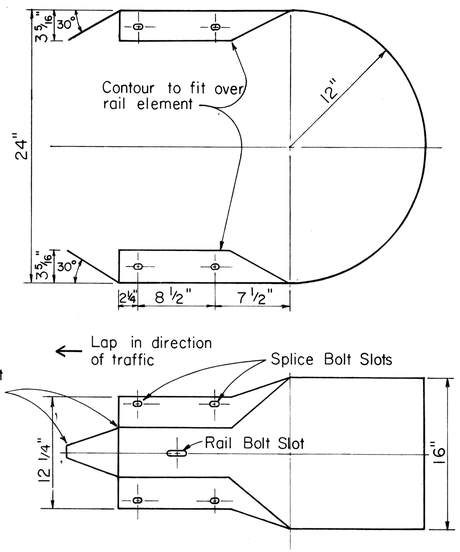

W BEAM END SECTION (BUFFER)

Scale: 1 1/2" = 1'-0"

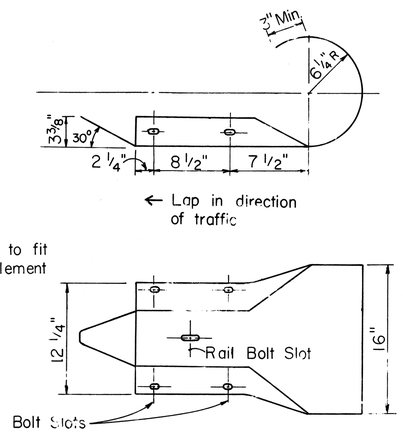

W BEAM END SECTION (ROUNDED)

Scale: 1 1/2" = 1'-0"

APPROVAL RECOMMENDED:
Eiichi Tanaka
TRAFFIC ENGINEER — DATE: 9/20/82

APPROVED:
Herbert Sakishima
ASSISTANT CHIEF, ENGINEERING — DATE: 9/22/82

NO.	REVISION	APPROVED BY	DATE
1	Supersedes sht. DT 501 approved 12/30/69	HF	9/22/82

STATE OF HAWAII
DEPARTMENT OF TRANSPORTATION
HIGHWAYS DIVISION

STANDARD DETAILS
METAL GUARDRAIL

Scale: As Noted — July, 1982

SHEET No. OF SHEETS DT 501

ORIGINAL PLAN — SURVEY PLOTTED BY / TRACED BY / DESIGNED BY / QUANTITIES BY / CHECKED BY — DATE
NOTE BOOK No.

FED. ROAD DIST. NO.	STATE	FED. AID PROJ. NO.	FISCAL YEAR	SHEET NO.	TOTAL SHEETS
HAWAII	HAW.	F-011-2(17)	1986	36	142

NOTE:

1. Metal guard rail connection to structures requires End Post Connection. See structure plans.
2. For detail of Breakaway Cable Terminal (BCT) See Sheet No. DT 519

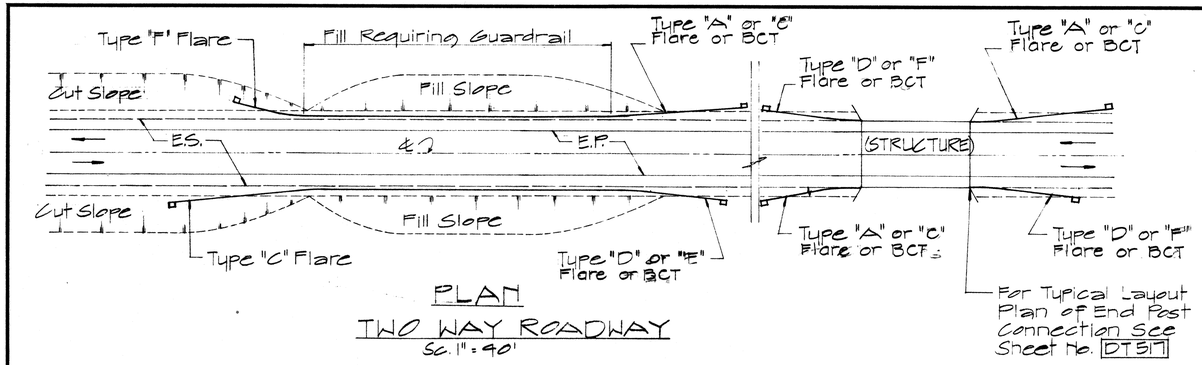

PLAN

TWO WAY ROADWAY

Sc. 1" = 40'

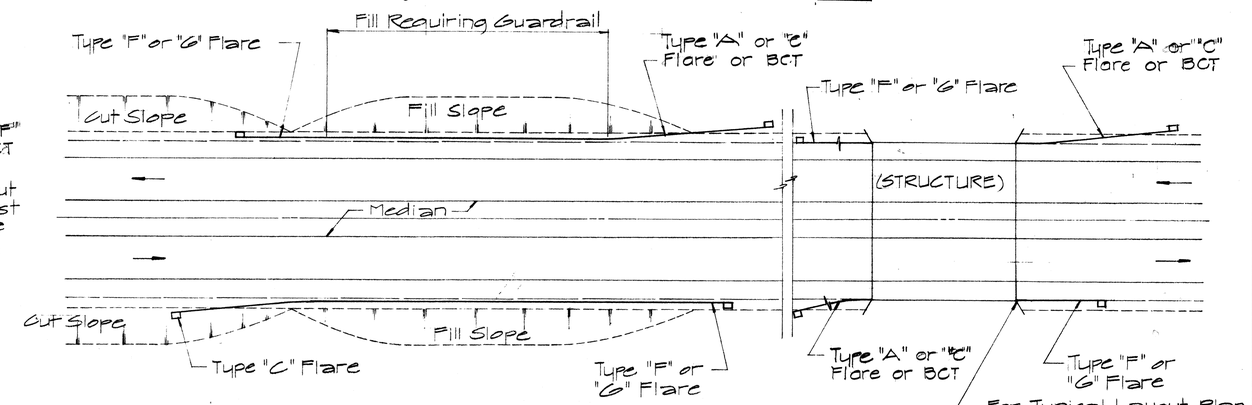

PLAN

ONE WAY ROADWAY (DIVIDED HIGHWAY)

Sc. 1" = 40'

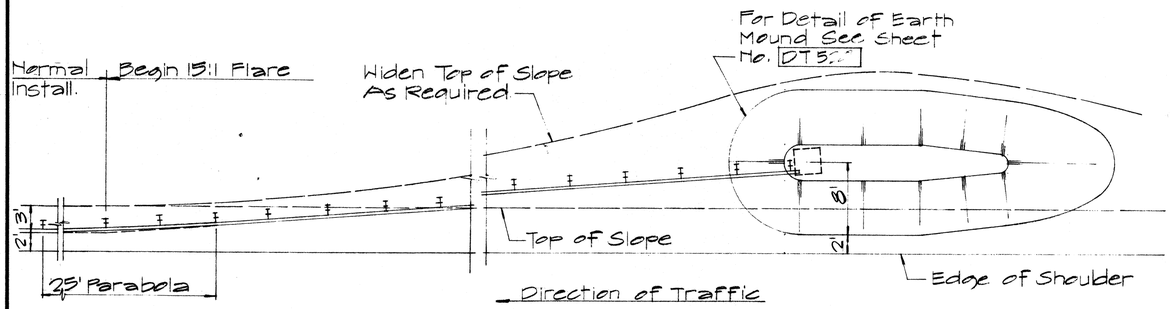

PLAN

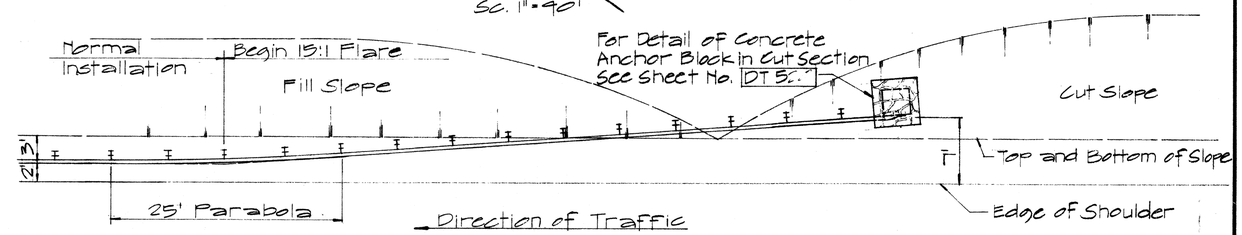

PLAN

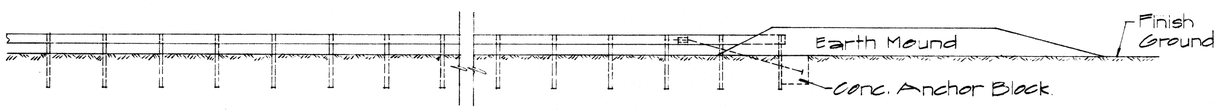

ELEVATION

TYPE "A" FLARE

Sc. 1/8" = 1'-0"

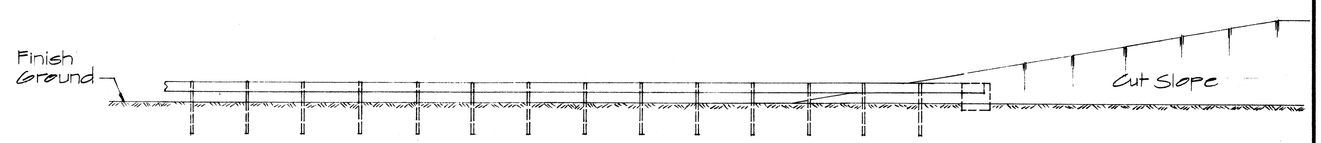

ELEVATION

TYPE "C" FLARE

Sc. 1/8" = 1'-0"

APPROVAL RECOMMENDED:

Euichi Tanaka — TRAFFIC ENGINEER — DATE 12/29/89

APPROVED

ASSISTANT CHIEF, ENGINEERING — DATE 12-30-89

NO.	REVISION	APPROVED BY	DATE
1	Delete Type "B" Flare and Type "E" Flare	H.T.	6/15/88

STATE OF HAWAII
DEPARTMENT OF TRANSPORTATION
HIGHWAYS DIVISION

STANDARD DETAILS OF APPROACH END FLARE - ONE & TWO WAY ROADWAY

Sc. As Noted — April 1969

SHEET No. OF SHEETS DT 516

ORIGINAL PLAN	SURVEY PLOTTED BY	DATE
	DRAWN BY	
	TRACED BY	
	DESIGNED BY	
NOTE BOOK	QUANTITIES BY	
No.	CHECKED BY	

PRINTED ON NO. 1000H CLEARPRINT

FED. ROAD DIST. NO.	STATE	FED. AID PROJ. NO.	FISCAL YEAR	SHEET NO.	TOTAL SHEETS
HAWAII	HAW.	F-011-2(17)	1986	37	142

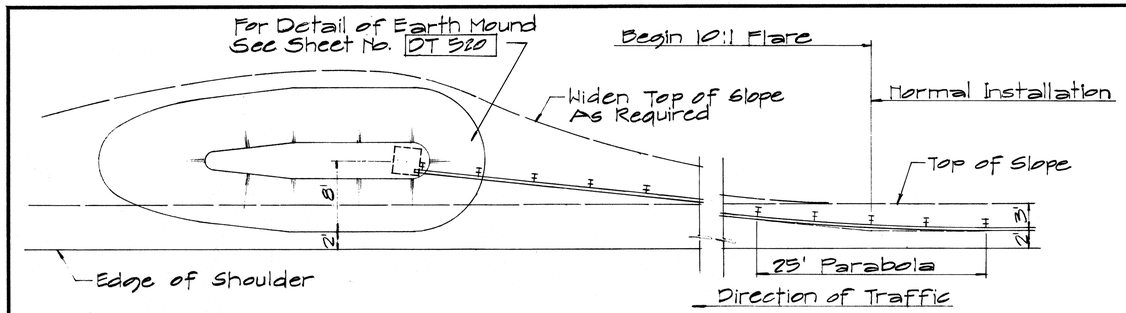

PLAN

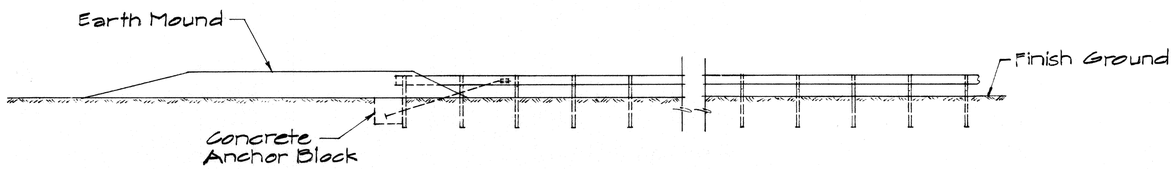

ELEVATION

TYPE "D" FLARE

Sc. 1/8" = 1'-0"

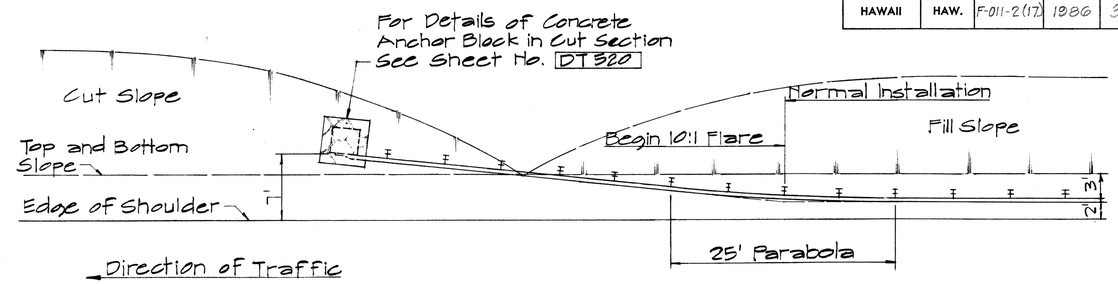

PLAN

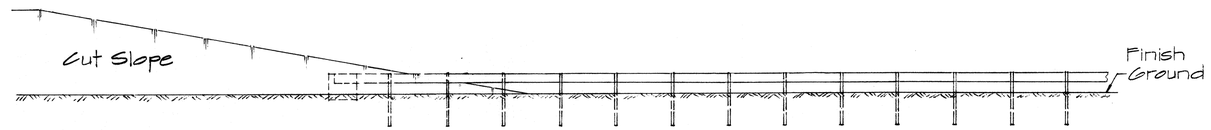

ELEVATION

TYPE "F" FLARE

Sc. 1/8" = 1'-0"

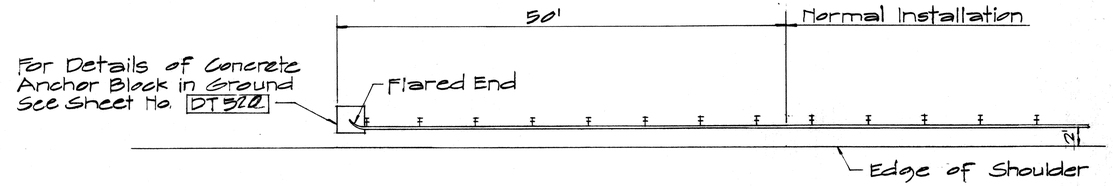

PLAN

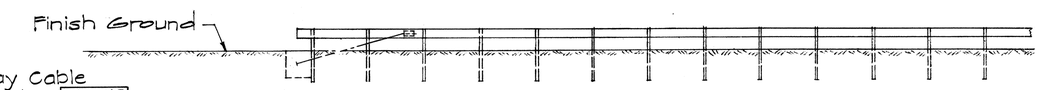

NOTE:

For detail of Breakaway Cable Terminal (BCT) See Sheet No. DT 519

ELEVATION

TYPE "G" FLARE

Sc. 1/8" = 1'-0"

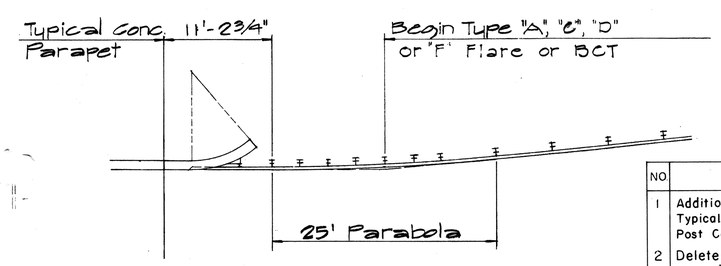

TYPICAL LAYOUT PLAN OF END POST CONNECTION

Sc. 1/8" = 1'-0"

APPROVAL RECOMMENDED:

Eiichi Tanaka — 12/29/69
TRAFFIC ENGINEER — DATE

APPROVED:

[illegible] — 12-30-69
ASSISTANT CHIEF, ENGINEERING — DATE

NO.	REVISION	APPROVED BY	DATE
1	Additional Posts Added to Typical Layout Plan Of End Post Connection	H.C.	4-12-72
2	Delete Type "B" Flare and Type "E" Flare	H.C.	6-15-78

STATE OF HAWAII
DEPARTMENT OF TRANSPORTATION
HIGHWAYS DIVISION

STANDARD DETAILS
TRAILING END
FLARE - ONE & TWO
WAY ROADWAY

Scale: As Noted — April 1969

SHEET No. 37 OF SHEETS DT 517

ORIGINAL PLAN | NOTE BOOK No. | SURVEY PLOTTED BY | DRAWN BY | TRACED BY | DESIGNED BY | QUANTITIES BY | CHECKED BY | DATE

PRINTED ON NO. 1000H CLEARPRINT

FED. ROAD DIST. NO.	STATE	FED. AID PROJ. NO.	FISCAL YEAR	SHEET NO.	TOTAL SHEETS
HAWAII	HAW.	F-011-2(17)	1986	38	142

Use 12" long Backup Plate at Posts where W-Beam splice does not occur.

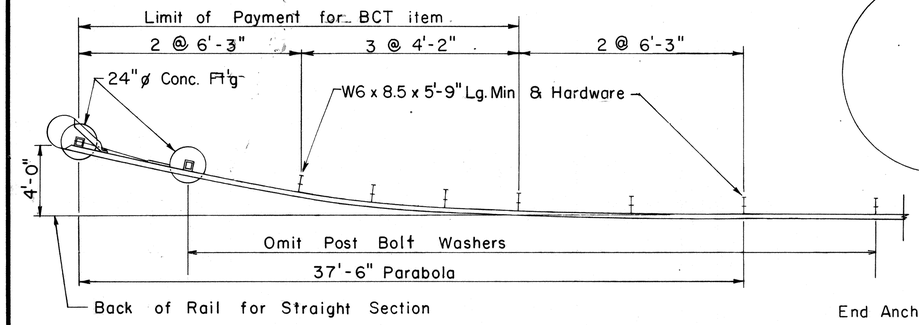

PLAN
Scale: 1/4" = 1'-0"

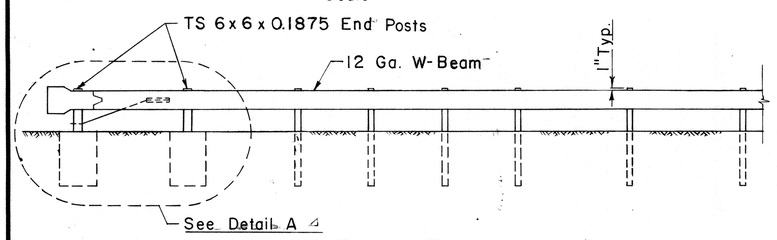

ELEVATION
Scale: 1/4" = 1'-0"

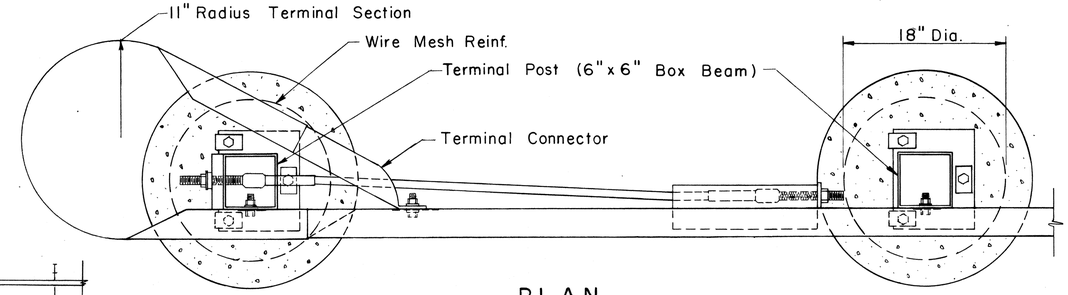

PLAN

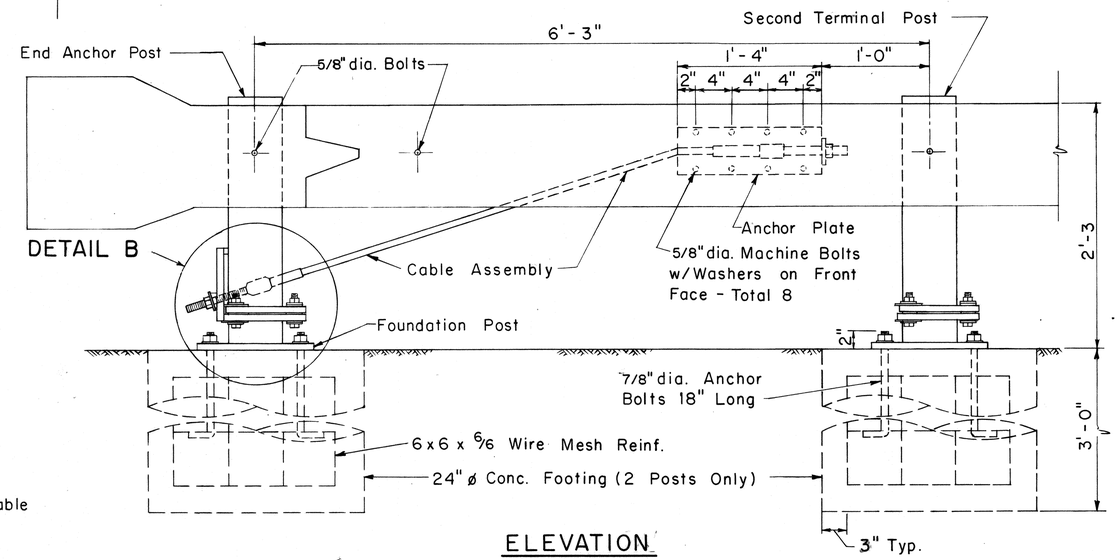

DETAIL B

ELEVATION
DETAIL A
Scale: 1 1/2" = 1'-0"

NOTES:

1. Anchor Plate and Anchor Cable Assembly (Standard Swaged Fitting and Stud). See Standard Detail Sheet No. DT 520.
2. Other Anchor Cable Assemblies may be used. Minimum breaking strength of assembly should be 40,000 lbs.
3. Second Terminal Post does not require holes to accomodate Anchor Cable.
4. Slip Base Load shall be controlled with a Calibrated Torque Wrench - Torque 155 - 170 ft. lbs.
5. Concrete shall be Class A.
6. B.C.T. Hardware has been superceded by "A Guide Standardized Highway Barrier Rail Hardware," A report prepared and approved by the AASHTO-AGC-ARTBA joint cooperation committee. All hardware shall conform to above mentioned publication and as revised from time to time.

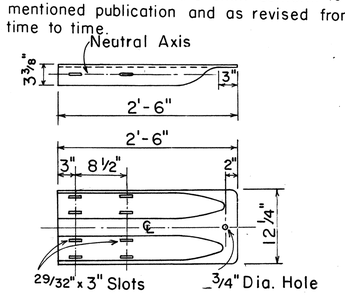

TERMINAL CONNECTOR
Scale: 1" = 1'-0"

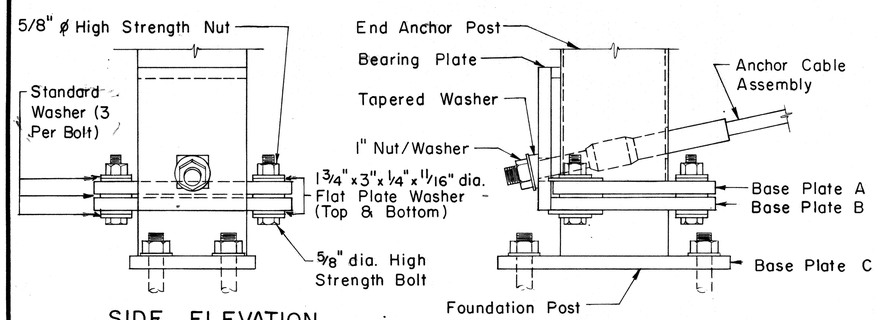

SIDE ELEVATION

FRONT ELEVATION

DETAIL B

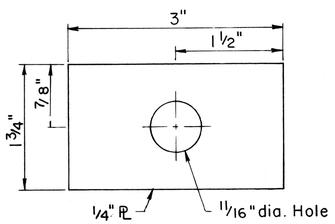

FLAT PLATE WASHER
Scale: Full Size

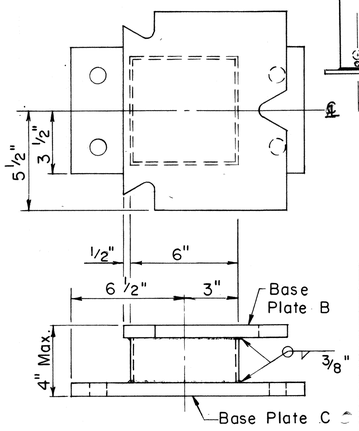

FOUNDATION POST
Scale: 3" = 1'-0"

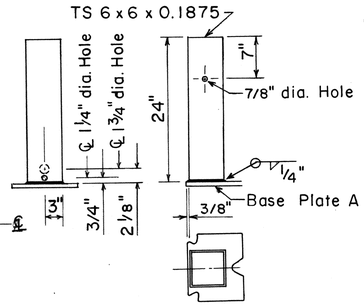

TERMINAL POST
Scale: 1" = 1'-0"

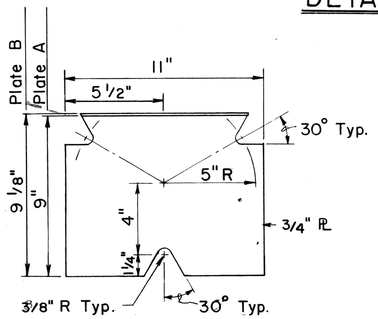

BASE PLATES A & B
Scale: 3" = 1'-0"

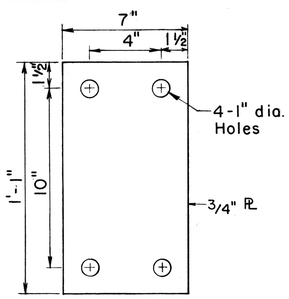

BASE PLATE C
Scale: 3" = 1'-0"

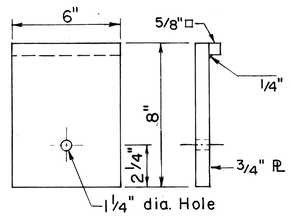

BEARING PLATE
Scale: 3" = 1'-0"

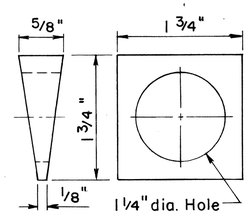

TAPERED WASHER
Scale: Full Size

APPROVAL RECOMMENDED:

Eiichi Tanaka
TRAFFIC ENGINEER — 6/14/78 DATE

APPROVED:

Harlowe Zakeishi
ASSISTANT CHIEF, ENGINEERING — 6/15/78 DATE

NO.	REVISION	APPROVED BY	DATE
1	Supersedes Sht. DT 519 Approved 12/30/69	H.T.	6/15/78
2	Added Note 6	H.T.	12/11/80
3	Eliminated requirement of 25' rail	[illegible]	1-31-85

STATE OF HAWAII
DEPARTMENT OF TRANSPORTATION
HIGHWAYS DIVISION

STANDARD DETAIL

BREAKAWAY CABLE TERMINAL (BCT)

Scale: As Shown — Date: June 1978

SHEET No. OF SHEETS DT 519

ORIGINAL PLAN	DATE
SURVEY PLOTTED BY	
DRAWN BY	
TRACED BY	
DESIGNED BY	
NOTE BOOK	QUANTITIES BY
No.	CHECKED BY

FED. ROAD DIST. NO.	STATE	FED. AID PROJ. NO.	FISCAL YEAR	SHEET NO.	TOTAL SHEETS
HAWAII	HAW.	F-011-2(17)	1986	39	142

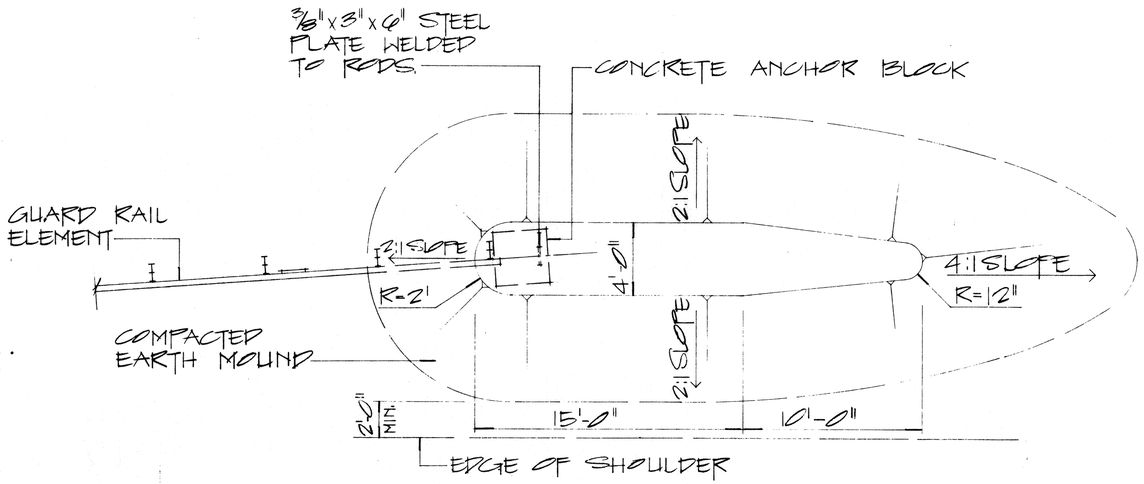

PLAN

EARTH MOUND DETAIL (SINGLE GUARD RAIL)

SCALE: 1/4" = 1'-0"

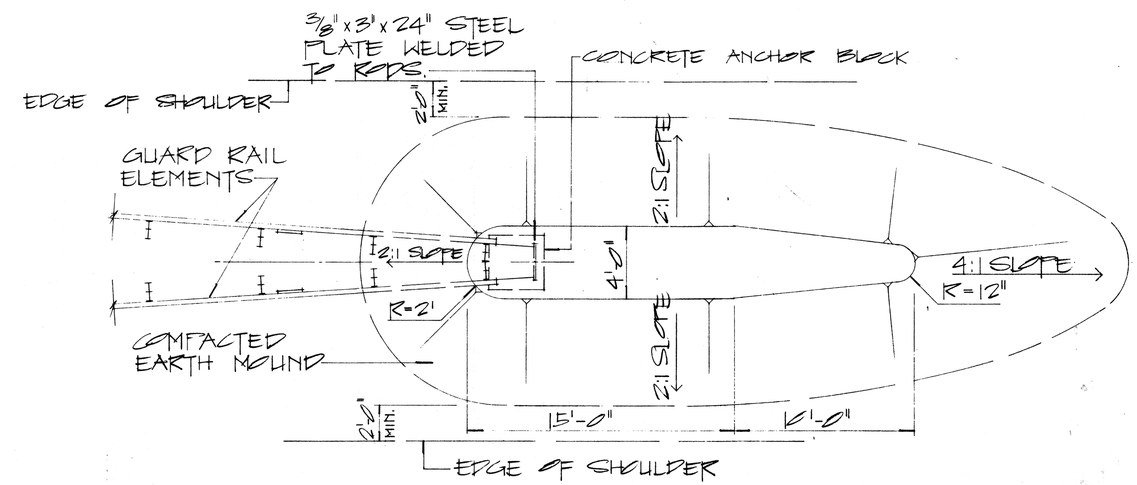

PLAN

EARTH MOUND DETAIL (DOUBLE GUARD RAIL)

SCALE: 1/4" = 1'-0"

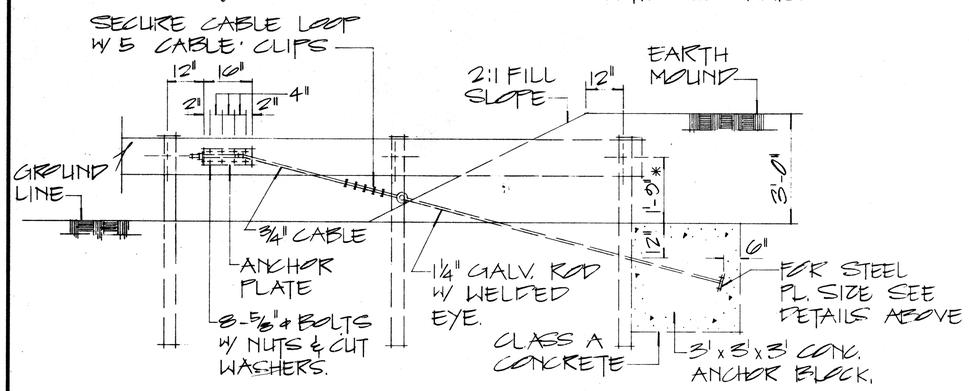

ANCHOR BLOCK DETAIL IN EARTH MOUND

SCALE: 1/2" = 1'-0"

NOTE:

1. GALVANIZED ANCHOR ROD, METAL GUARD RAIL AND POST BURIED IN GROUND SHALL BE COVERED WITH a Min. 20-Mil thickness of Coal TAR ENAMEL. Conforming to AWWA Standard: C 203
2. CONCRETE, GRP, EXCAVATION, EARTH MOUND, ANCHOR RODS AND MISCELLANEOUS APPURTENANCES NECESSARY TO ANCHOR THE GUARD RAIL ENDS SHALL BE INCIDENTAL TO THE METAL GUARD RAIL.

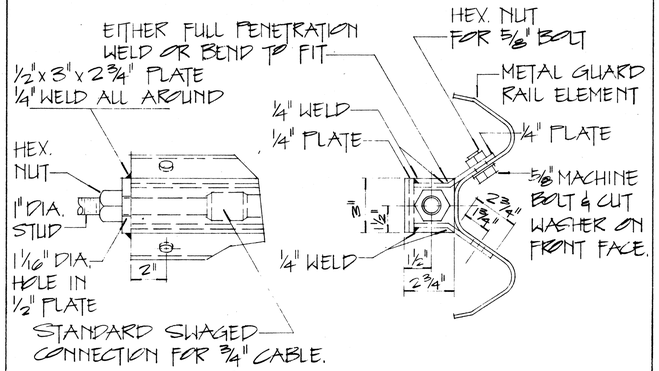

ANCHOR PLATE DETAILS

SCALE: 1" = 3"

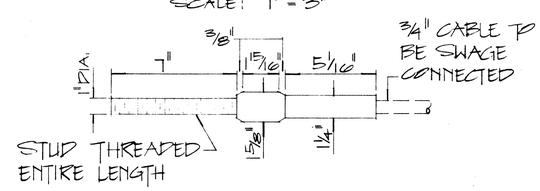

STANDARD SWAGED FITTING AND STUD

SCALE: 1" = 3"

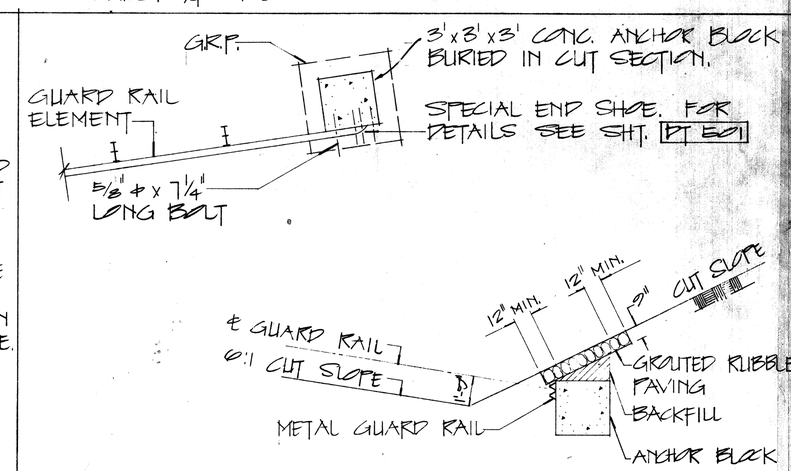

ANCHOR BLOCK IN CUT SECTION

SCALE: 1/4" = 1'-0"

APPROVAL RECOMMENDED: Eiichi Tanaka — TRAFFIC ENGINEER — DATE 12/29/69

APPROVED: [signature] — ASSISTANT CHIEF, ENGINEERING — DATE 12-30-69

NO.	REVISION	APPROVED BY	DATE

STATE OF HAWAII
DEPARTMENT OF TRANSPORTATION
HIGHWAYS DIVISION

STANDARD DETAILS

EARTH MOUND AND ANCHOR BLOCK DETAILS

SCALE: AS SHOWN OCT 1969

SHEET No. OF SHEETS PT 520

ORIGINAL PLAN | SURVEY PLOTTED BY | DRAWN BY | TRACED BY | DESIGNED BY | QUANTITIES BY | CHECKED BY | DATE | NOTE BOOK No.

K+E CRYSTALENE LA 2920 TRACING PAPER