FED. ROAD DIST. NO.	STATE	PROJ. NO.	FISCAL YEAR	SHEET NO.	TOTAL SHEETS
HAWAII	HAW.	HWY-H-02-06M	2006	11	12

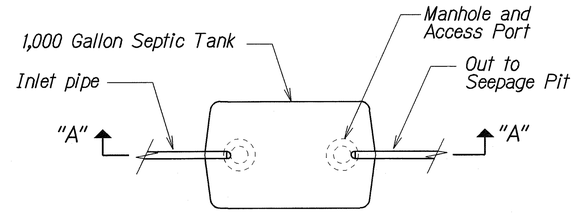

PLAN OF SEPTIC TANK
Scale: Not to Scale

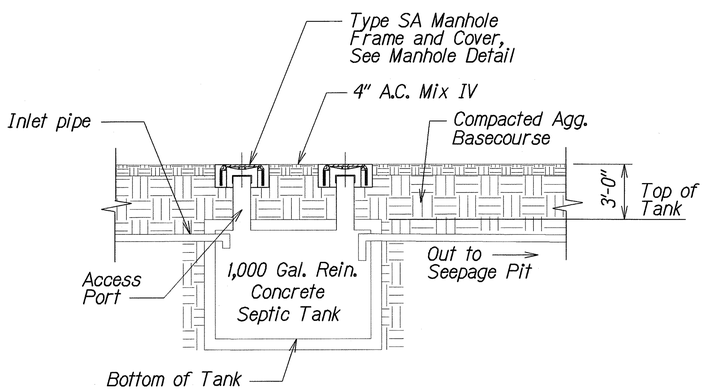

SECTION "A - A" THRU SEPTIC TANK
Scale: Not to Scale

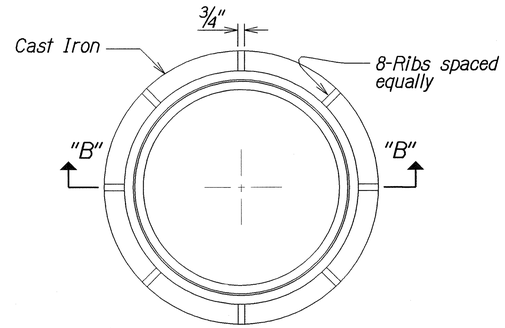

PLAN OF MANHOLE FRAME
Scale: Not to Scale

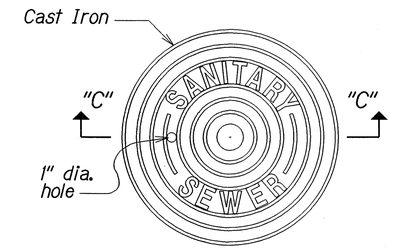

PLAN OF MANHOLE COVER
Scale: Not to Scale

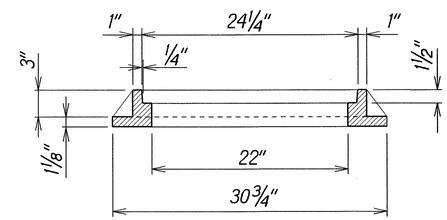

SECTION "B - B"
Scale: Not to Scale

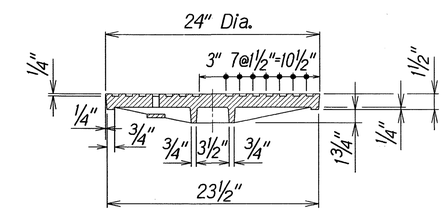

SECTION "C - C"
Scale: Not to Scale

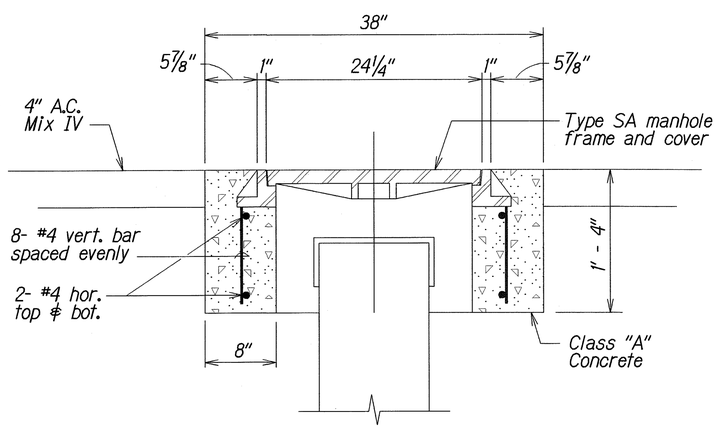

MANHOLE DETAIL
Scale: Not to Scale

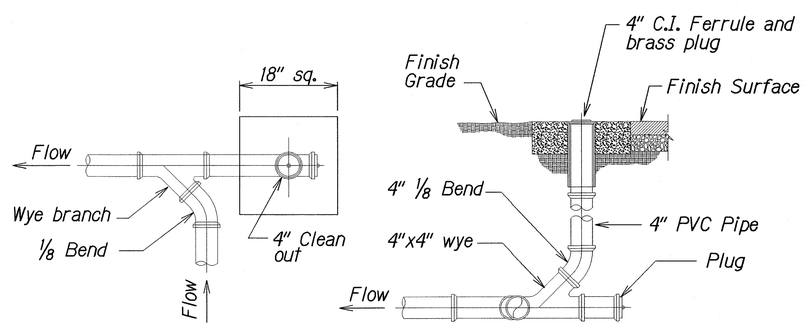

CLEAN OUT TO GRADE DETAIL
Scale: Not to Scale

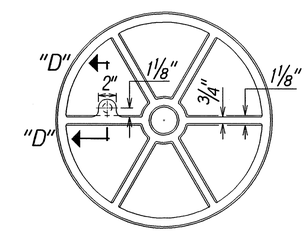

BOTTOM VIEW OF COVER
Scale: Not to Scale

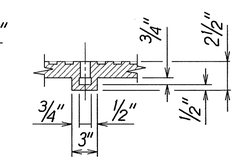

SECTION "D - D"
Scale: Not to Scale

ORIGINAL PLAN	SURVEY PLOTTED BY	DATE
	DRAWN BY	
NOTE BOOK	TRACED BY	
	DESIGNED BY	
	QUANTITIES BY	
	CHECKED BY	

STATE OF HAWAII
DEPARTMENT OF TRANSPORTATION
HIGHWAYS DIVISION

SEPTIC TANK DETAILS

HILO BASEYARD
INSTALLATION OF SEPTIC SYSTEMS
PROJECT NO. HWY-H-02-06M

Scale: As Shown Date: April, 2006

SHEET No. 1 OF 1 SHEETS