FED. ROAD DIST. NO.	STATE	PROJ. NO.	FISCAL YEAR	SHEET NO.	TOTAL SHEETS
HAWAII	HAW.	HWY-H-04-99M	2000	10	73

NOTE:
GRIND SMOOTH ALL WELDED CONNECTIONS.

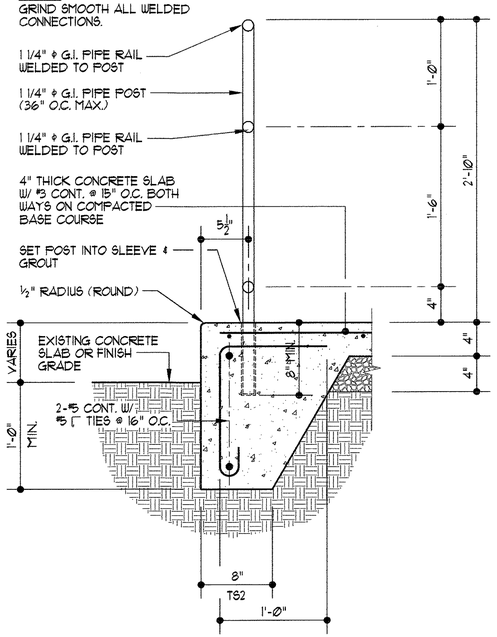

A A2.5 DETAIL TS2
1 1/2"=1'

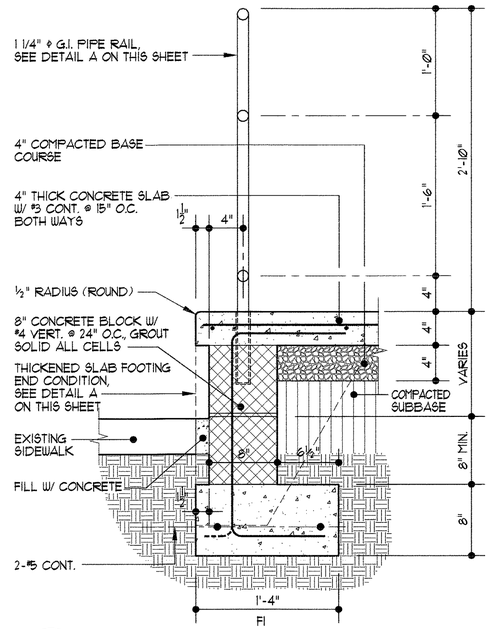

B A2.5 DETAIL F1
1 1/2"=1'

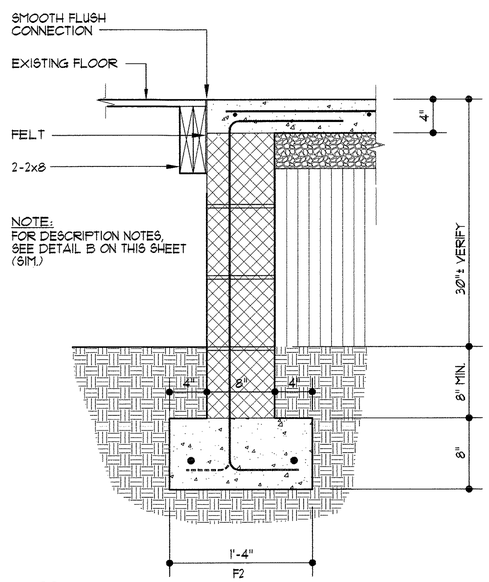

C A2.5 DETAIL F2
1 1/2"=1'

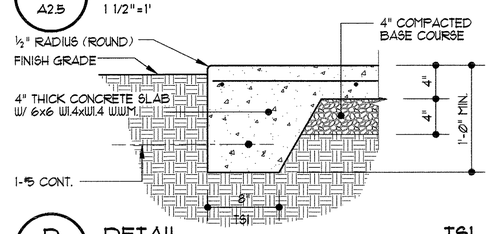

D A2.5 DETAIL TS1
1 1/2"=1'

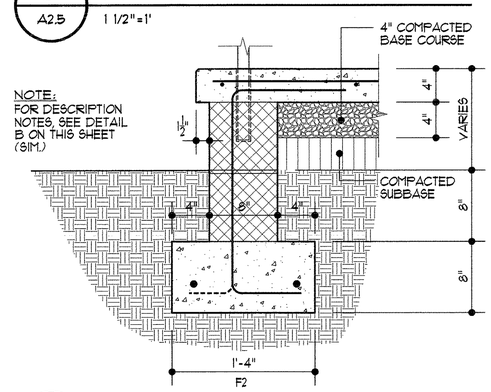

E A2.5 DETAIL F2
1 1/2"=1'

ORIGINAL PLAN		DATE
	SURVEY PLOTTED BY	
	DRAWN BY	
	TRACED BY	
NOTE BOOK	DESIGNED BY	
	QUANTITIES BY	
No.	CHECKED BY	

STATE OF HAWAI'I
DEPARTMENT OF TRANSPORTATION
HIGHWAYS DIVISION

BUILDING A DETAILS

HILO BASEYARD IMPROVEMENTS

PROJECT NO. HWY-H-04-99M

S. RUSSELL ODA LICENSED PROFESSIONAL ARCHITECT NO. 1644 HAWAII USA

THIS WORK WAS PREPARED BY ME OR UNDER MY SUPERVISION.

ODA/McCARTY ARCHITECTS LIMITED

Scale: Noted Date: April 2000

DWG. No. A2.5 SHEET No. 1 OF 1 SHEETS